MITSUMI

Digital output gage pressure sensor

MMR902A##A



Outline

This product is digitally outputs a pressure value which was corrected in the module. Customers need no correction because it corrects and outputs the differences of sensors and temperature characteristics. It does not require complicated sensor drive or control circuit, and devices with high performance can be made only with this module and an external microcontroller which will be the host.

Applications

Blood pressure monitor for home appliance

Devices using air pressure

Features

① Small package 7.0(W) ×7.0(D) ×7.2(H)mm

② A high-accuracy pressure value can be output
Pressure resolution : 0.001mmHg
Pressure effective resolution : 0.020mmHgRMS
Pressure accuracy : ±2.0mmHg (±266Pa)

③ It corrects the differences of sensors and temperature characteristics when shipped from our factory

④ It digitally outputs pressure value by a built-in sequencer (SPI,I2C)

Specification

ITEM	SPECIFICATION
Pressure Type	Gage Pressure
Pressure Medium	Air (no Condensation)
Operating Pressure Range	-4~47.99kPa(-30~360mmHg)
Operating Temperature Range	0 ～ 60℃
Supply Voltage Range	1.7 ～ 3.6V
Conversion Time	3.91 / 7.81 / 15.625 / 250ms
Current Consumption	650uA
Current Consumption at Shutdown	0.1uA Max
Pressure accuracy	±266Pa(±2.0mmHg)
Pressure effective resolution	0.040 / 0.028 / 0.020 / 0.005 mmHgRMS
Interface	SPI / I2C
Size	7.0(W) ×7.0(D) ×7.2(H)mm

Block Diagram

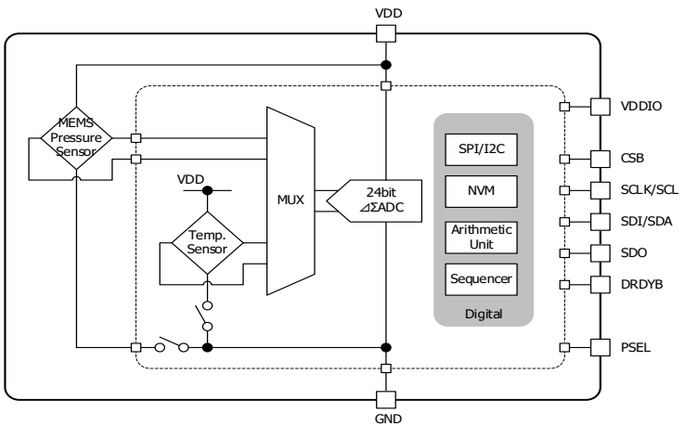

Typical Performance Characteristics

It outputs a pressure value which was corrected the differences of sensors and temperature characteristics

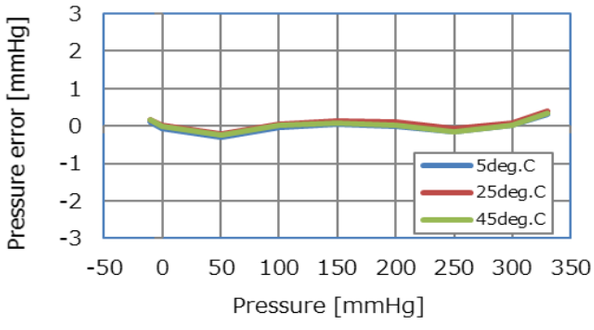

MinebeaMitsumi
Passion to Create Value through Difference

minebeamitsumi semiconductor Search

https://product.minebeamitsumi.com/en/product/category/sensor/ics/

Mitsumi Electric CO.,LTD.
Semiconductor Business Division
Strategy Engineering Department
tel:+81-46-230-3470

■ All brand names, logos, product names, trade names and service names described here are trademarks or registered trademarks of their respective companies or organizations.
■ Any products mentioned in this leaflet are subject to any modification in their appearance and others for improvements without prior notification.
■ The details listed here are not a guarantee of the individual products at the time of ordering. When using the products, you will be asked to check their specifications.

December 2022 Rev.1