Charge pump voltage inverter IC

MM3631 series

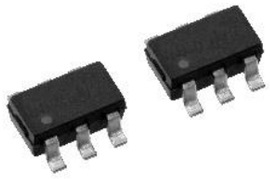

Overview

The MM3631 is a reversing charge pump IC. Generates a negative voltage over the input voltage range of 1.8V to 3.3V using two external capacitors.
The package is a 6-pin SOT-26B (2.9 x 2.8 x 1.15 mm) small package. The CE terminal is built in, and the standby current is reduced to 1 μA or less in standby.

Features

- Oscillation frequency circuit included
- Input over voltage protection circuit included
- High efficiency 93% @1mA

Application

- Mobile device
- Negative power supply of amplifier circuit

Package

- SOT-26B

PIN CONFIGURATION

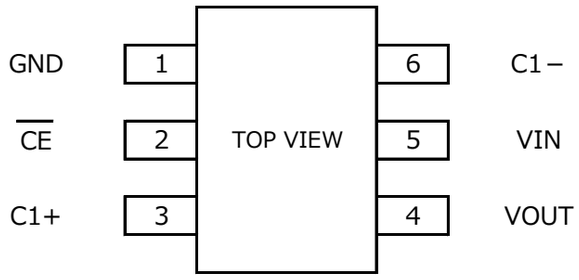

TERMINAL EXPLANATIONS

PIN No.	SYMBOL	FUNCTION
1	GND	GND.
2	CE	Shut down terminal.
3	C1+	Positive charge pump capacitor terminal.
4	VOUT	Negative output terminal.
5	VIN	VDD terminal.
6	C1−	Negative charge pump capacitor terminal.

Mitsumi Electric CO.,LTD.
Semiconductor Business Division
Strategy Engineering Department
tel:+81-46-230-3470

■ Any products mentioned this leaflet are subject to any modification in their appearance and others for improvements without prior notification.
■ The details listed here are not a guarantee of the individual products at the time of ordering.
■ When using the products, you will be asked to check their specifications.

BLOCK DIAGRAM

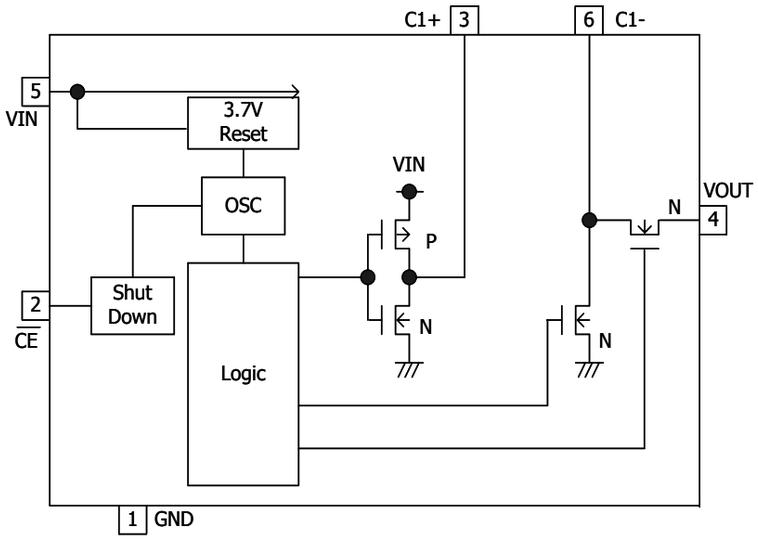

ABSOLUTE MAXIMUM RATINGS

(unless otherwise specified)

ITEM	SYMBOL	MIN.	MAX.	UNIT
Supply voltage	VIN	-0.3	6	V
VOUT terminal Output voltage	VOUT	-3.5	0.3	V
C1(+) terminal Output voltage	VC1+	-0.3	6.3	V
C1(-) terminal Output voltage	VC1-	-3.5	0.3	V
CE terminal Output voltage	VCE	-0.3	6	V
VOUT terminl Outout current	IOUT	-	50	mA
Junction Temperature	T_{jMAX}	-	150	℃
Storage temperature	Tstg	-40	125	℃
Power Dissipation	Pd	-	220	mW

RECOMMENDED OPERATING CONDITIONS

ITEM	SYMBOL	MIN.	MAX.	UNIT
Operating Ambient temperature	Topr	-30	80	℃
Operating voltage	Vop	1.8	3.3	V

ELECTRICAL CHARACTERISTICS

(VIN=2.8V,unless otherwise specified)

PARAMETER	SYMBOL	CONDITIONS	MIN.	TYP.	MAX.	UNIT
Current consumption	Icc	VCE=0V, Unload	35	70	140	uA
Current consumption at stand-by	Iccs	VCE=2.8V, Unload	-	-	1	uA
Frequency	f OSC		75	120	192	kHz
Output resistance	Rout	IL=5mA	20	45	90	Ω
CE terminal "H" voltage	Vceh	H=Disenable	0.9	-	-	V
CE terminal "L" voltage	Vcel	L=Enable	-	-	0.25	V
Power efficiency (IL=1mA)	Peff	IL=1mA	-	92	-	%
Power efficiency (IL=5mA)	Peff	IL=5mA	-	85	-	%
Power efficiency (IL=10mA)	Peff	IL=10mA	-	80	-	%
Voltage conversion efficiency (IL=1mA)	Veff	IL=1mA	95	-	-	%
Voltage conversion efficiency (IL=5mA)	Veff	IL=5mA	90	-	-	%
Voltage conversion efficiency (IL=10mA)	Veff	IL=10mA	80	-	-	%
Over voltage *	VOP		3.50	3.70	3.84	V
Over voltage Chattering *	VOPchat		0	30	60	mV
Over voltage hysterisis	VOPhys		25	50	100	mV

* VOP≦VIN＜VOP+VOPchat： VOUT=Chattering
VOP+VOPchat≦VIN： VOUT=0V
Please refer to Over Voltage Protection of OPERATION EXPLANATION.

TEST CIRCUITS

Current consumption	Icc

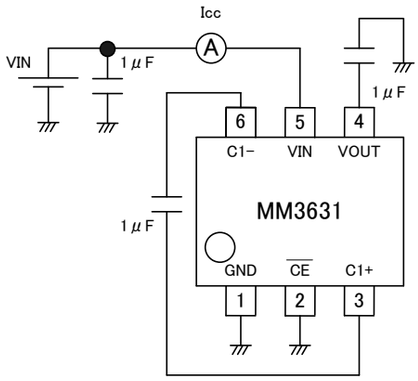

Frequency	f OSC

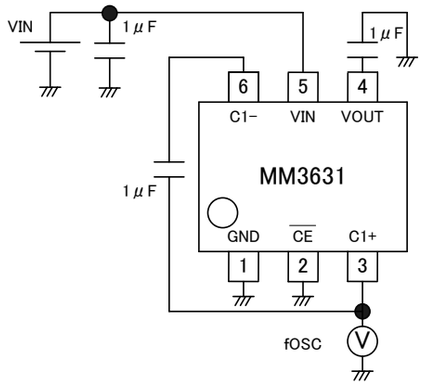

CE terminal "H" / "L" voltage	V c e h V c e

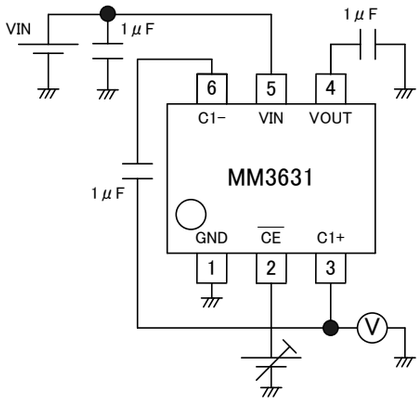

Current consumption at stand-by	Iccs

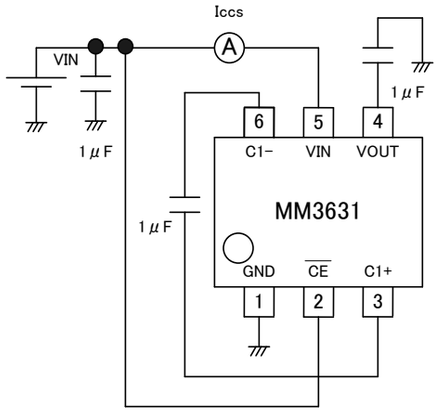

Power efficiency	Peff
Voltage conversion efficiency	Veff
Output resistance	Rout

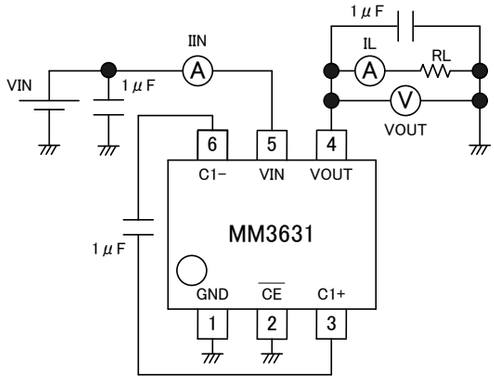

TYPICAL APPLICATION CIRCUIT

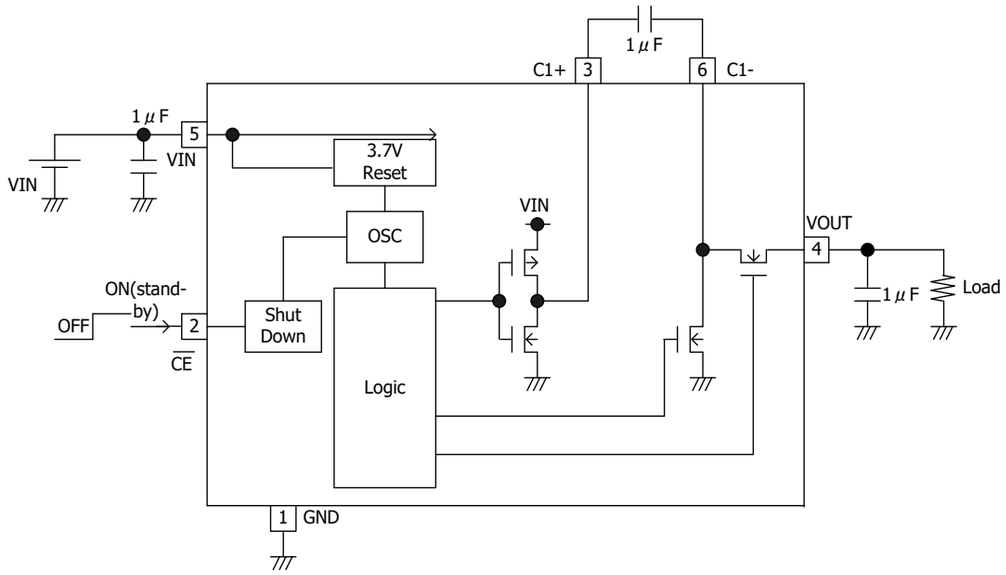

Application hints

- In case the supply voltage is under MIN value of absolute maximum rating when such as battery connect voltage supply terminal, it is possibility to destroy this IC by overcurrent flowing. Please use this IC within absolute maximum rating.

- In the event a problem which may affect industrial property or any other rights of us or a third party is encountered during the use of information described in these circuit, we shall not be liable for any such problem, nor grant a license therefore.

TYPICAL PERFORMANCE CHARACTERISTICS

Supply current - Supply voltage

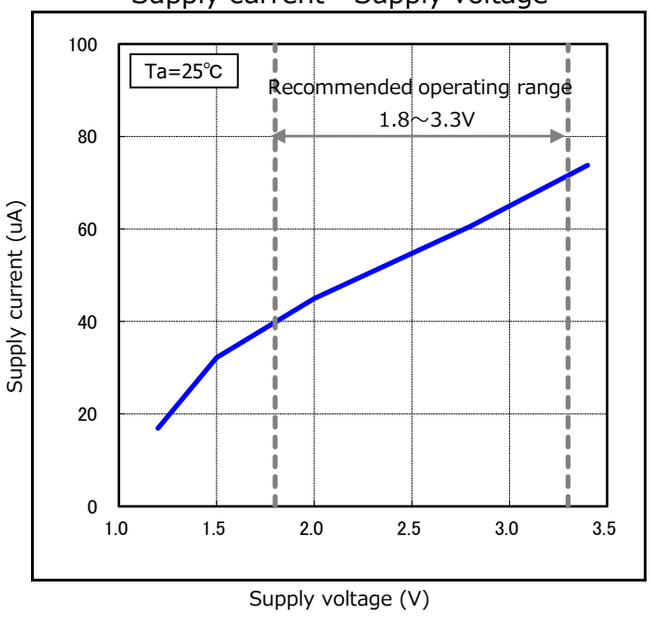

Stand-by current - Supply voltage

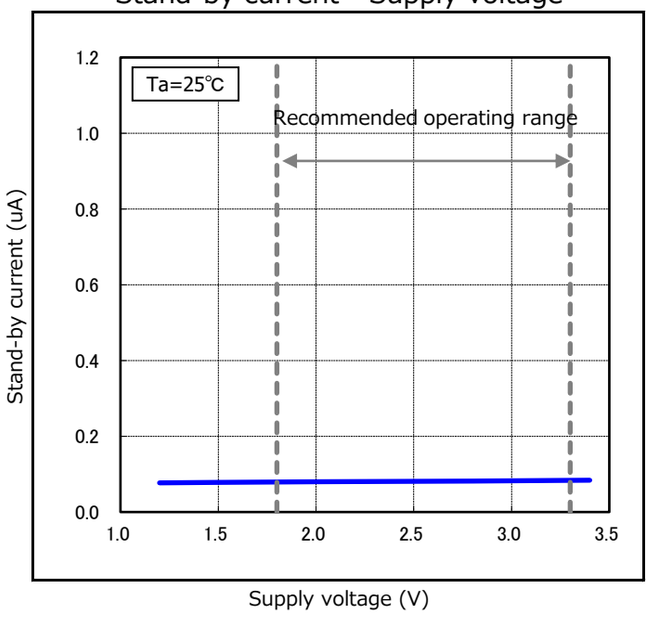

Frequency - Supply voltage

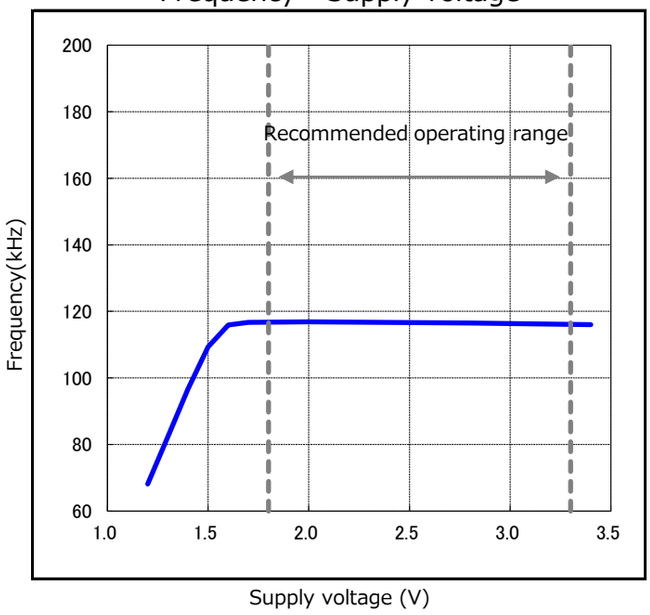

Output voltage - Output current

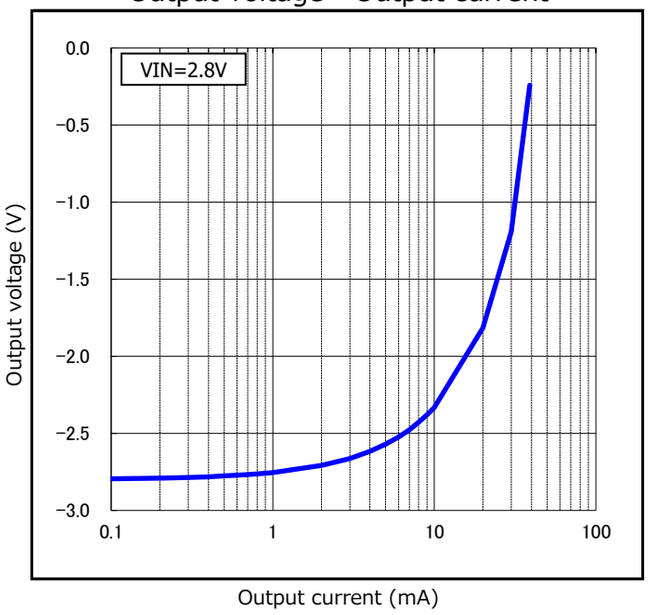

Supply current - Temperature

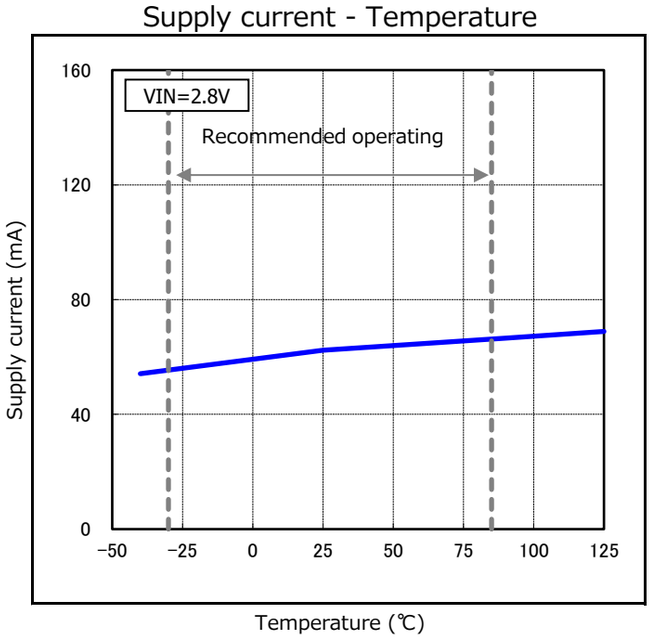

Power efficiency - Temperature

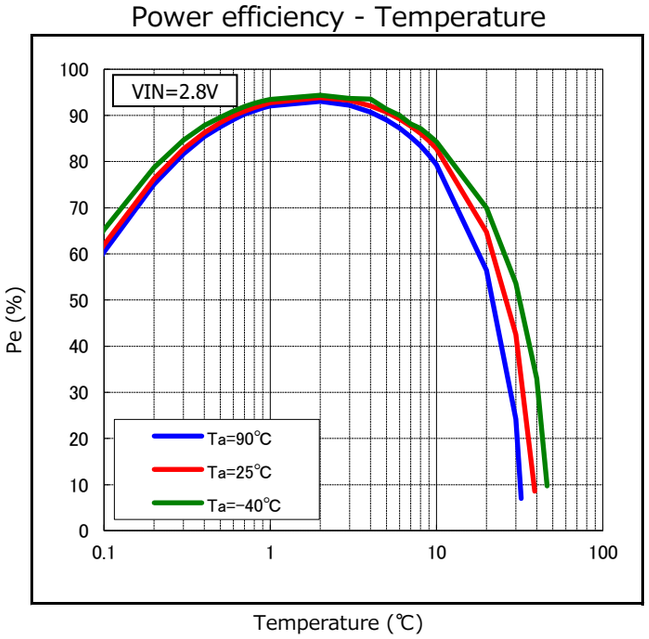

OPERATION EXPLANATION

- Over Voltage Protection

When VIN becomes 3.7V or more, VOUT is turned off. (VOP)
OVP cancel by about -50mV from a detection value (VOP). (VOPhys)
＊After OVP detect,Detection and a release are repeated（Chattering）.
Output voltage becomes unstable then.
After Chattering occurs for about +30 mV from a detection value, output voltage is set to 0V. (VOPchat

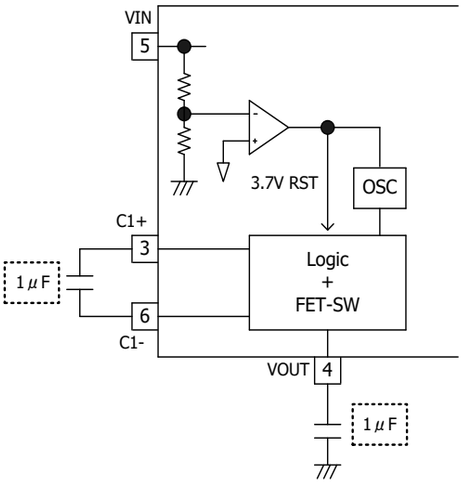

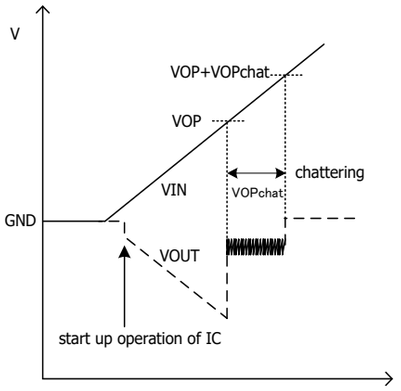

・Chattering Waveform

① VIN=0 to 4V

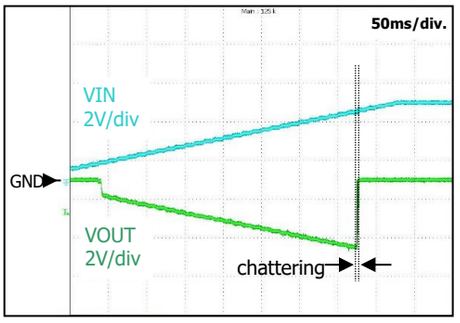

② VOP≦VIN＜VOP+VOPchat

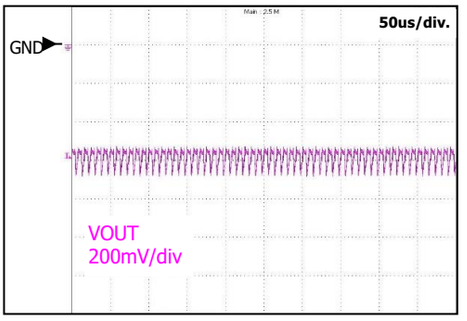

- Recommendation of capacitor for charge pump

  1μF ceramic capacitor is recommended the following characteristics.

  ESR : 100mΩ or less.
  Temperature characteristics : B (±10) rank
  Capacitance tolerance : K (±10) rank
  Rated voltage : 10V or more

- CE terminal logic

  Table 1 shows the function of CE terminal.

CE state	Mode
L	Operation
H	Stand-by

Table.1 Truth table

- Power dissipation

  The Pd value characteristic of SOT-26B(Elemental substances) is the following.

  The Power dissipation change if board to mount IC change because radiative heat fix at board.It is reference data below, Evaluate IC in the set.

  Single Device
  Power dissipation 0.22W Ta=25℃

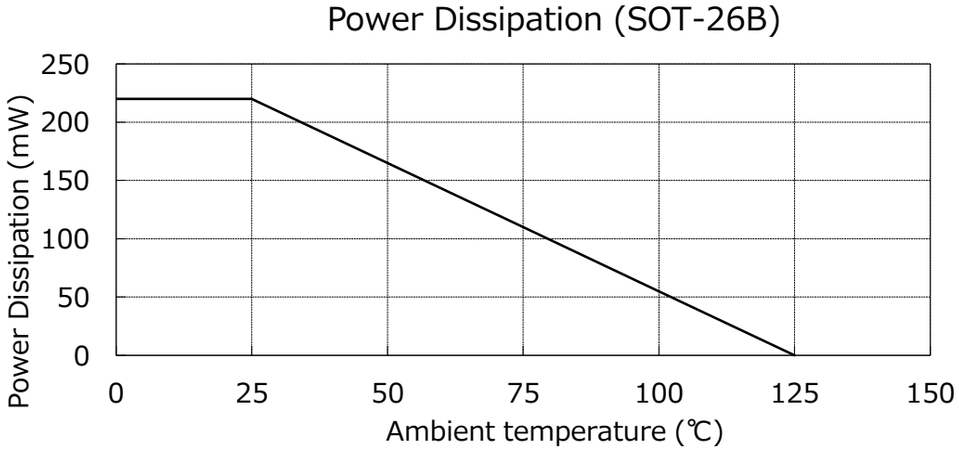

  It is recommended to layout the VIA for heat radiation in the GND pattern of reverse (of IC) when there is the GND pattern in the inner layer (in using multiplayer substrate).
  By increasing these copper foil pattern area of PCB, Power dissipation improves.

NOTE

1. There is a possibility with deterioration and destruction of IC when using it exceeding the absolute maximum rating.
   The absolute maximum rating , Never exceed it.
   The functional operation is not assured.

2. There is a possibility that it becomes impossible to maintain this performance and reliability IC original when using it exceeding recommended operation voltage.
   Please use it in recommended operation voltage.

3. Due to restrictions on the package power dissipation, the output current value may not be satisfied.Attention should be paid to the power dissipation of the package when the output current is large or the voltage between Iinput and Output is high.

4. The wire of VIN and GND is required to print full ground plane for noise and stability.

5. The input capacitor must be connected a distance of less than 1cm from input pin.

6. It is able to an unstable operation when you use the capacitor with intense capacitance change.
   The capacitor has the dependency at the power-supply voltage and the temperature. ☐
   The capacity value changes by the environment used. Please evaluate IC in the set.

7. The overcurrent protection circuit is'nt built into this IC.

DIMENSIONS

PACKAGE : SOT-26B

UNIT	mm

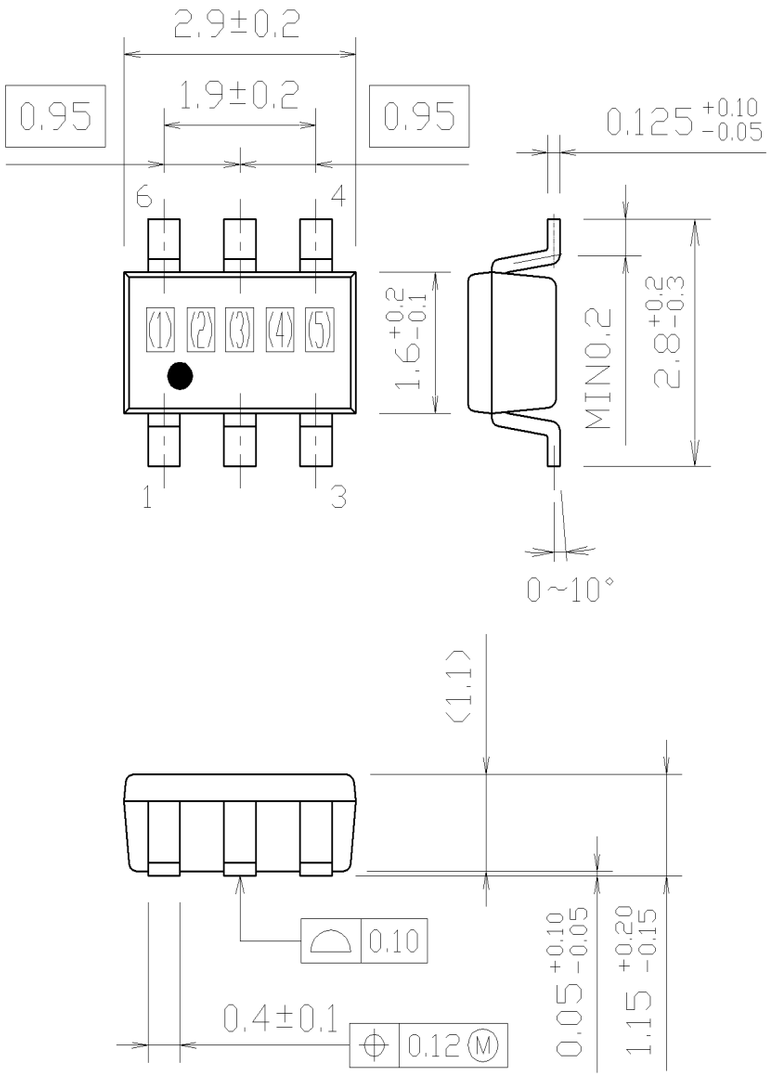

MARKING CONTENTS

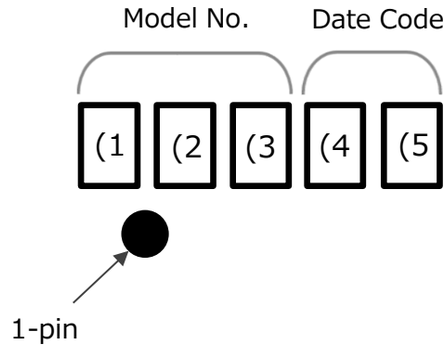

Model name	Model No.		
	(1)	(2)	(3)
M M 3 6 3 1 X N R E H	6	3	1