MITSUMI

Boost DC-DC converter with UVLO function

MM3355 Series

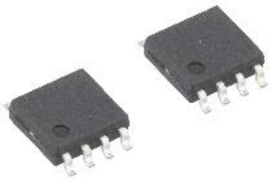

Overview

This IC is a PWM / PFM controlled step-up DC-DC converter.
The Under Voltage Lock Out function prevents liquid leakage due to over-discharging of dry batteries.
UVLO detection 0.9V, compatible with use with one dry battery.

Features

- Built-in 0.35Ω output cutoff switch
- Input low voltage detection: 0.9V typ.
- Built-in overheat protection function

Application

- Mobile devices
- Power supply for microcomputer

Package

- SOP-8D

Main specifications

- Input voltage range : 0.9~5.5V
- Output voltage : 1.8~5.0V
- Output voltage accuracy : ±3%
- Switching frequency : 100kHz
- Current consumption : 100μA typ. (operation)
  0.1μA typ. (OFF)

PIN CONFIGURATION

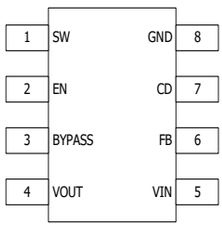

TERMINAL EXPLANATIONS

PIN No.	SYMBOL	I/O	FUNCTION
1	SW	Output	Power switching pin
2	EN	Input	Enable pin for ON/OFF
3	BYPASS	Input	Bypass switch input pin
4	VOUT	Output	Output voltage pin
5	VIN	Input	Supply voltage pin
6	FB	Input	Feedback pin
7	CD	Input	Capasitor connect pin for UVLO dead time
8	GND	-	Ground pin

■ Any products 記載の会社名・製品名・サービス名等は、各社の商標または登録商標です。 specifications and services mentioned herein may be changed without prior notification.
■ 記載された製品仕様および使用上の注意事項について、お客様の事前の承諾なく変更することがあります。
■ 記載内容に関する問い合わせ先、および弊社の製品に関する最新の情報は、営業窓口までお問い合わせください。

BLOCK DIAGRAM

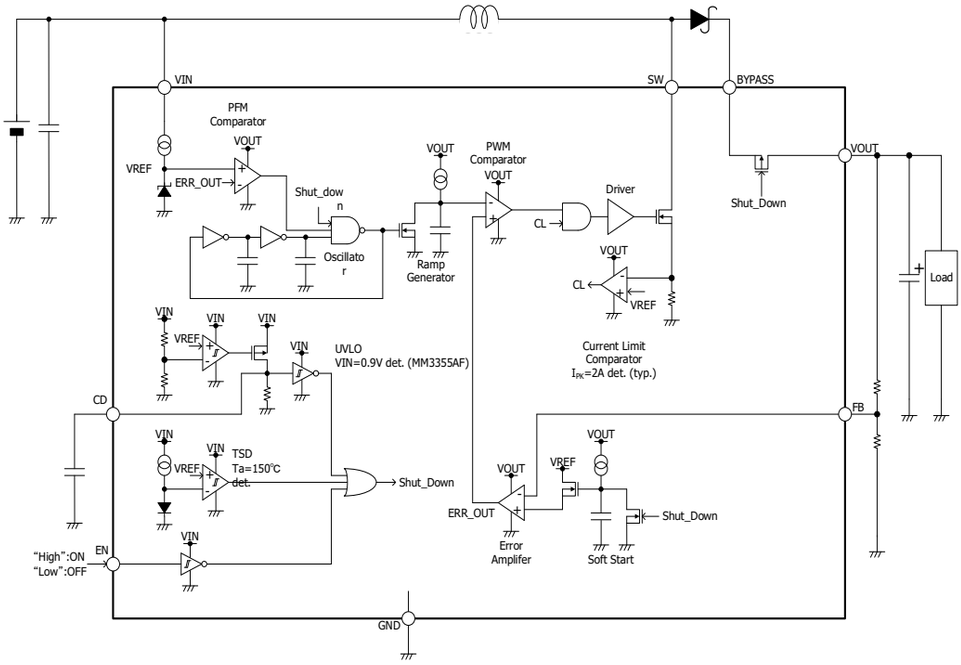

ABSOLUTE MAXIMUM RATINGS

(Ta=25℃ / Ta=25℃, unless otherwise specified)

ITEM	SYMBOL	MIN.	MAX.	UNIT
VIN voltage	V_{IN}	-0.3	6	V
SW voltage	V_{SW}	-0.3	6	V
CD voltage	V_{CD}	-0.3	6, V_{IN}+0.3	V
BYPASS voltage	V_{BYPASS}	-0.3	6	V
VOUT voltage	V_{OUT}	-0.3	6, V_{BYPASS}+0.3	V
FB voltage	V_{FB}	-0.3	6	V
EN voltage	V_{EN}	-0.3	6	V
Storage temperature	Tstg	-55	150	℃

RECOMMENDED OPERATING CONDITIONS

ITEM	SYMBOL	MIN.	MAX.	UNIT
Operating Ambient temperature	Topr	-40	85	℃
Operating voltage	Vop	0.9	5.5	V

ELECTRICAL CHARACTERISTICS

(unless otherwise noted, V_{IN}=1.2V, V_{OUT}=3.0V, Ta=25℃)

PARAMETER	SYMBOL	TEST CONDITIONS	MIN.	TYP.	MAX.	UNIT
Feedback voltage	V_{FB}	V_{FB}=0V→1V	0.485	0.500	0.515	V
Feedback leakage current	I_{FB}	-	-0.1	-	0.1	μA
Supply current 1 *1	I_{DD1}	V_{IN}=1.2V、V_{OUT}=3.0V、I_{OUT}=10uA	-	100	200	μA
Supply current 2	I_{DD2}	V_{FB}=1V	-	10	20	μA
Supply current 3	I_{DD3}	V_{EN}=0V	-	0.1	1	μA
Supply current 4	I_{DD4}	V_{IN}<V_{UVLO}	-	2	4	μA
Switch pin on resistance *1	R_{SW}	-	-	150	-	mΩ
Bypass pin on resistance *1	R_{BYP}	-	-	300	-	mΩ
Output voltage temperature characteristics *1	⊿Vo/⊿T	-40℃≦T≦85℃	-	±100	-	ppm/℃
Oscillator frequency	f_{OSC}	V_{OUT}=3.0V	80	100	120	kHz
Maximum duty cycle	Max Duty	V_{OUT}=3.0V	80	-	-	%
EN pin "High" input voltage	V_{ENH}	V_{EN}=0→5.5V	0.75	-	-	V
EN pin "Low" input voltage	V_{ENL}	V_{EN}=5.5→0V	-	-	0.3	V
EN pin "High" input current	I_{ENH}	V_{EN}=5.5V	-0.1	-	0.1	μA
EN pin "Low" input current	I_{ENL}	V_{EN}=0V	-0.1	-	0.1	μA
Soft start time	T_{SS}	V_{IN}=0→1.2V, Time to reach to V_{OUT}×0.95	1.8	3.6	7.2	ms
UVLO detection voltage	V_{UVLO}	V_{IN}=1.2V→0.7V	0.8	0.9	1.0	V
UVLO hysteresis voltage	⊿V_{UVLO}	V_{IN}=0.7V→1.2V	-	100	-	mV
UVLO dead time	T_{UVLO}	C_{CD}=0.01μF, V_{IN}=1.2→0.7V	25	50	75	ms

*1 : The parameter is guaranteed by design.

TEST CIRCUIT

1)

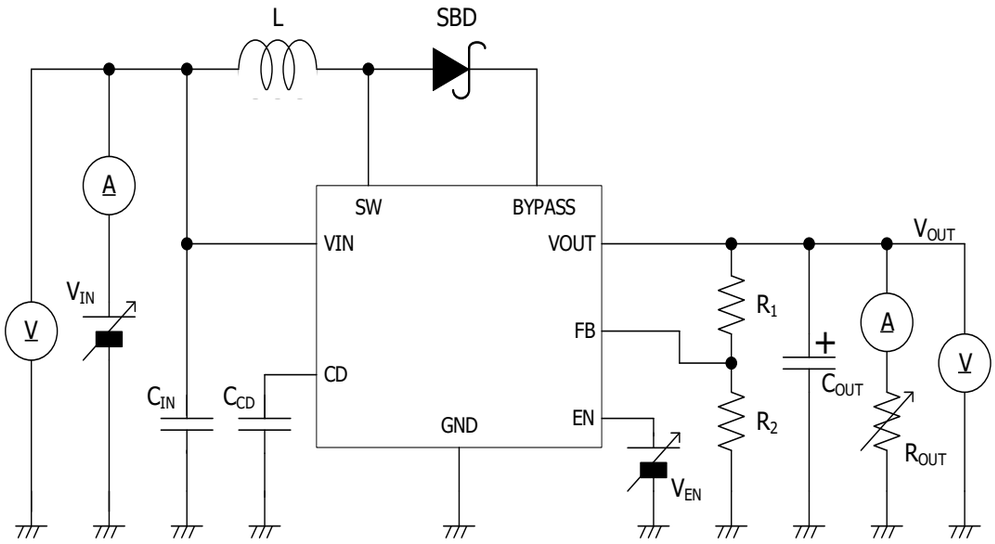

2)

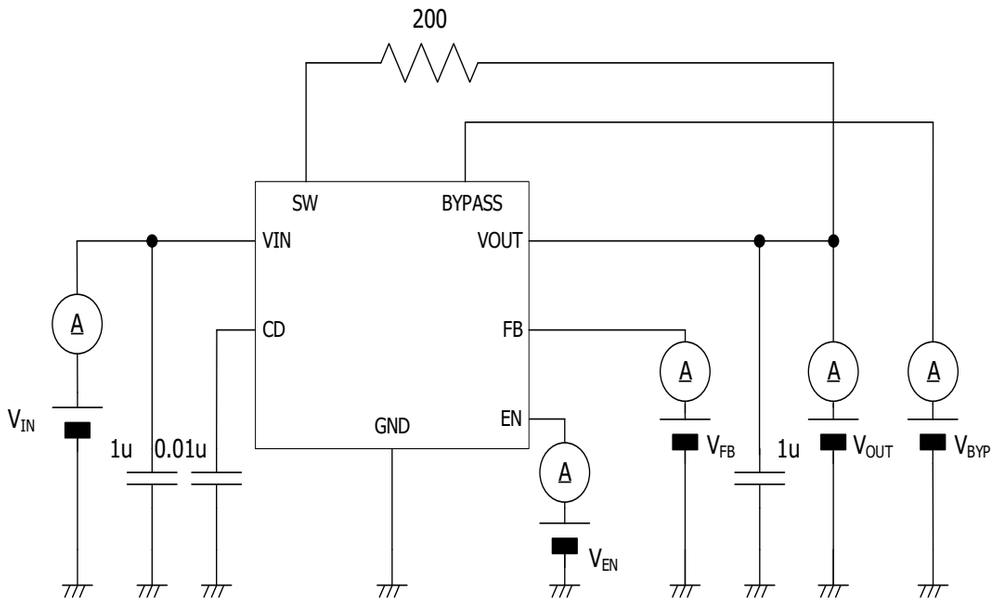

TIMING CHART

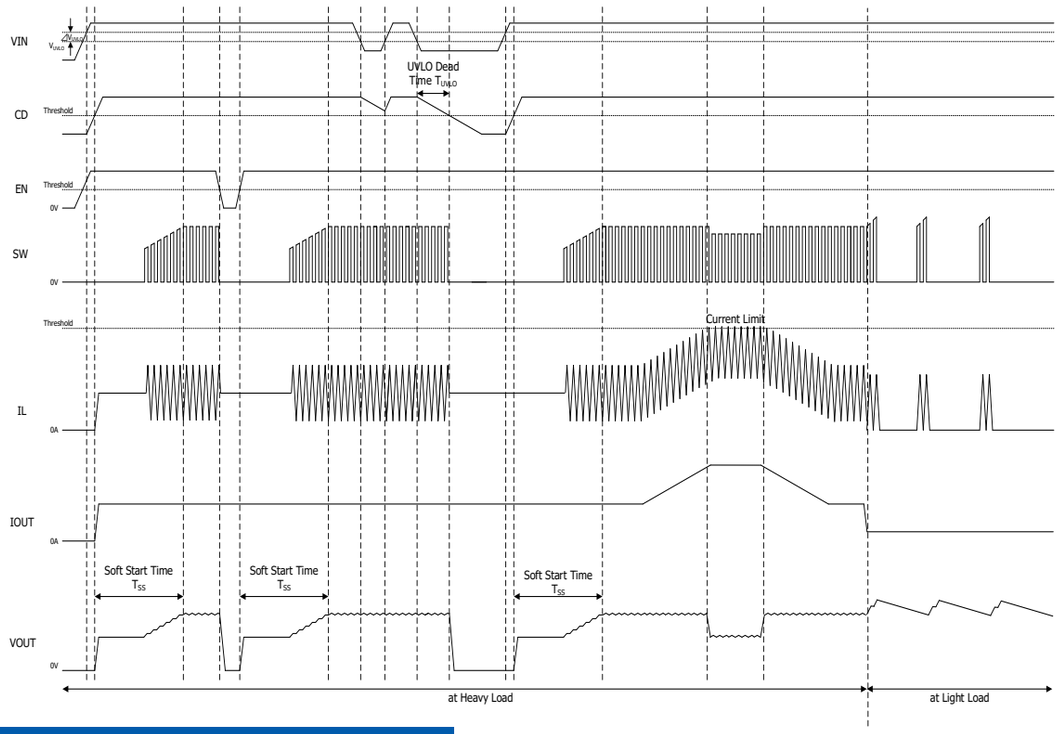

TYPICAL APPLICATION CIRCUIT

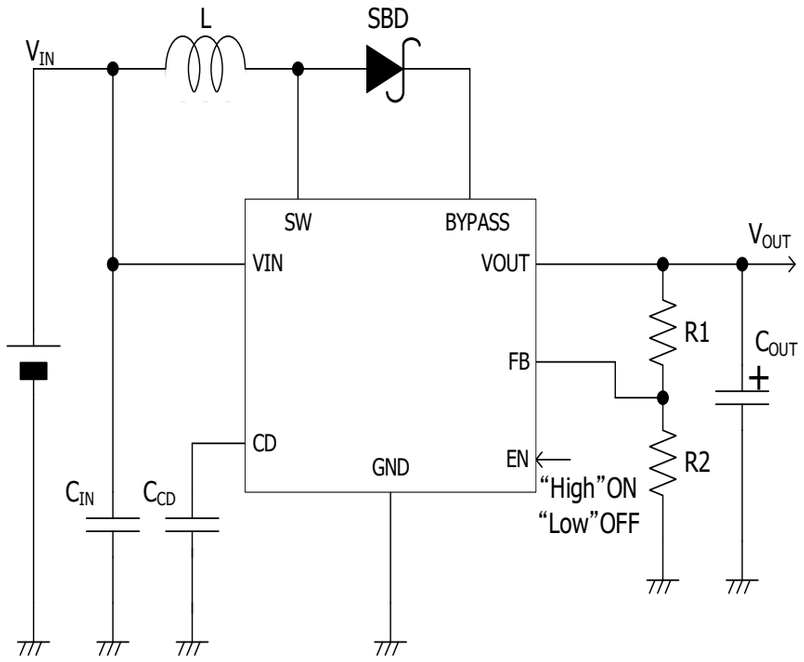

- RECOMMENDED PARTS

C_{IN}	: 10µF (ECJ2FB1A106K Panasonic)	SBD	: MA22D28 (Panasonic)
C_{OUT}	: 100µF (EEEFK0J101P Panasonic)	R1	: 1MΩ (VOUT=3.0V)
C_{CD}	: 0.01µF	R2	: 200kΩ (VOUT=3.0V)
L	: 10µH (CAL 45TB100K Taiyo Yuden)		
	: 10µH (C5-K1.8LA Mitsumi)		

- Notice

  This circuit doesn't necessarily guarantee to operate.

TYPICAL PERFORMANCE CHARACTERISTICS

Efficiency - Output current
VIN=1.0, 1.2, 1.5V, VOUT=3.0V

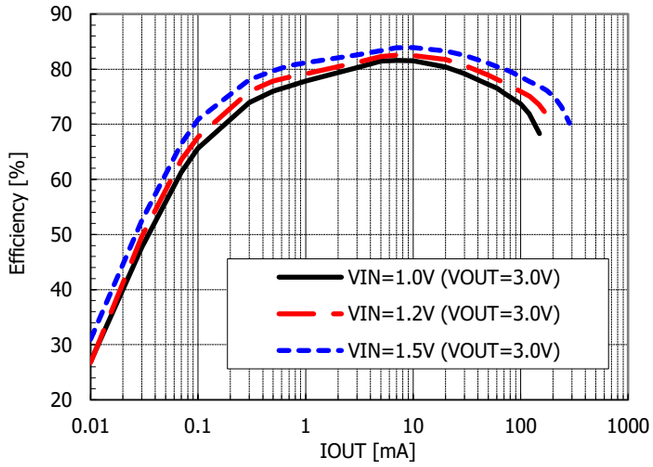

Output voltage - Input voltage
VOUT=3.0V, IOUT=1mA

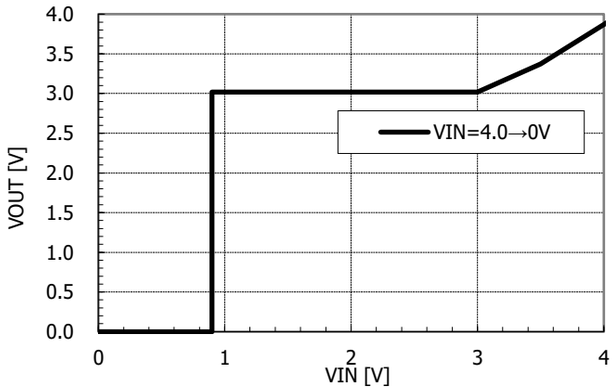

Output voltage - Output current
VIN=1.0, 1.2, 1.5V, VOUT=3.0V

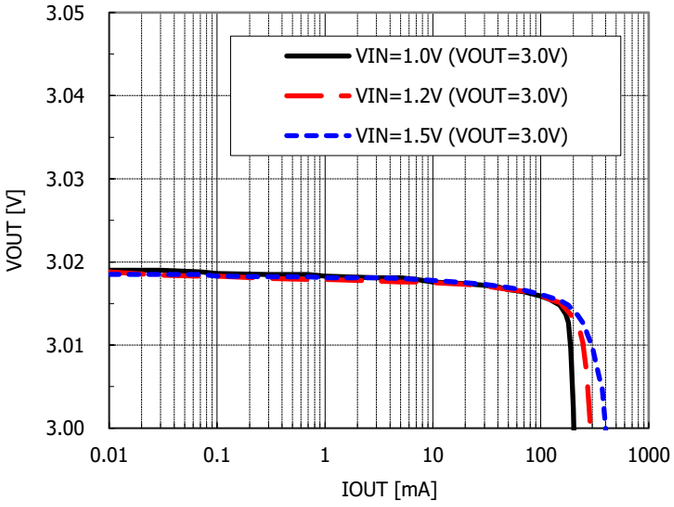

Supply current 1 - Output voltage
VOUT=3.0V, IOUT=10uA

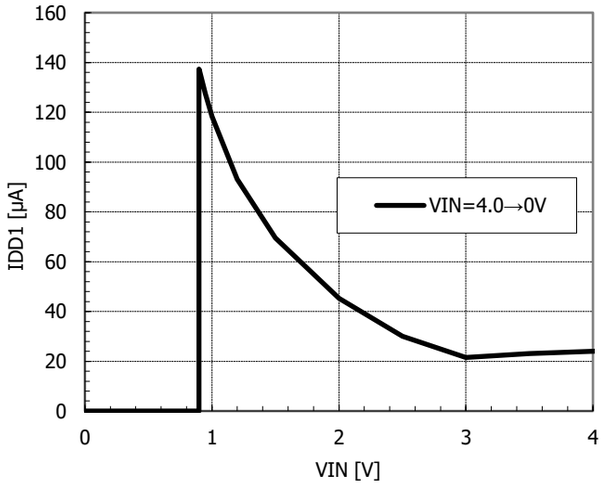

Switch pin on resistance - Output voltage
ISW=100mA

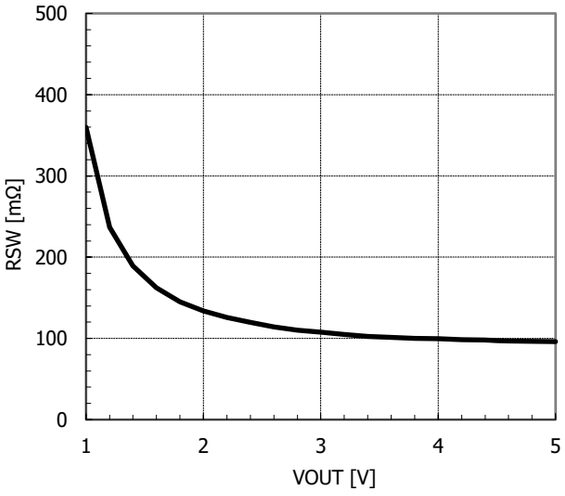

Bypass pin on resistance - Bypass voltage
IBYPASS=100mA

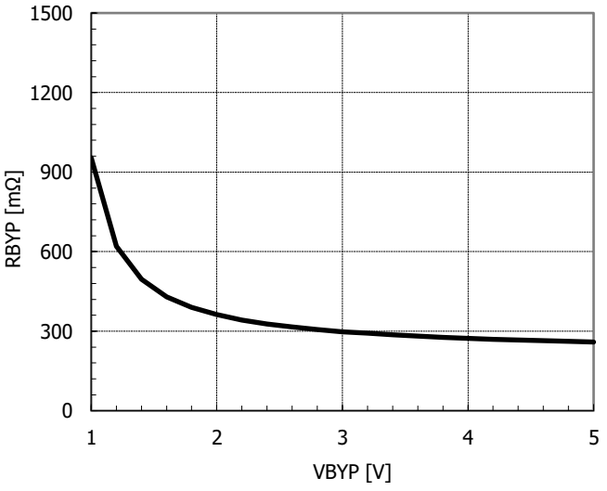

UVLO dead time - Delay capacitance
VIN=1.2→0.7V, VOUT=3.0V

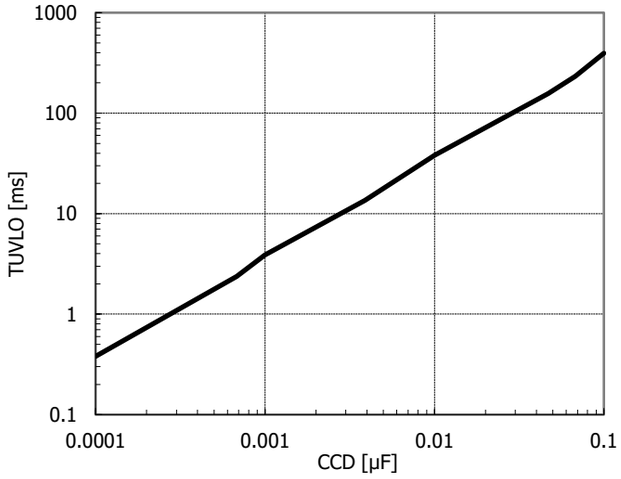

Feedback voltage - Temperature
VOUT=3.0V, VFB=0→1V

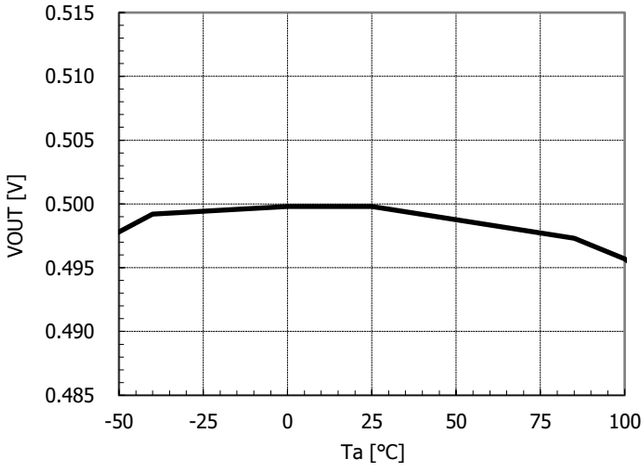

Supply current 2 - Temperature
VOUT=3.0V, VFB=1.0V

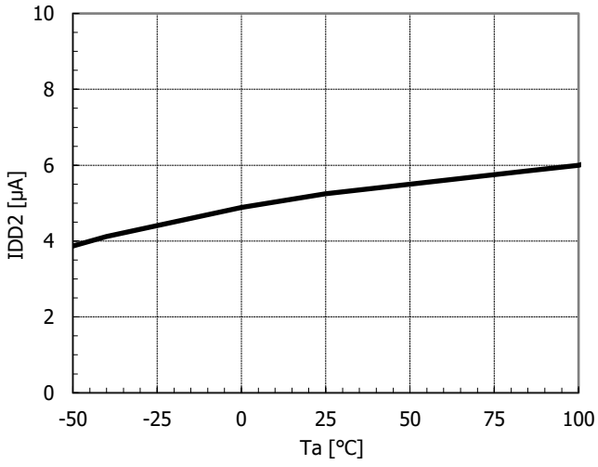

Supply current 3 - Temperature
VIN=5.5V, VEN=0V

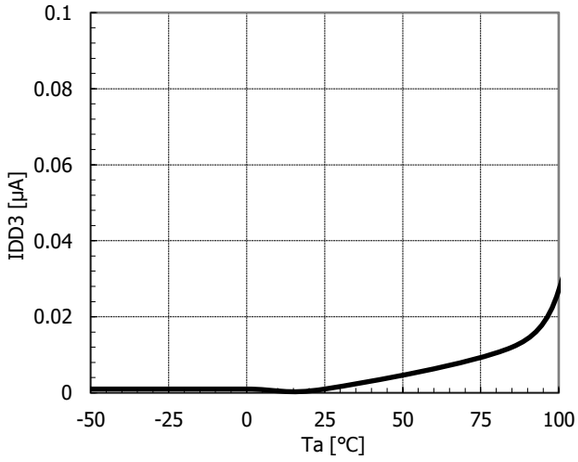

Oscillator frequency - Temperature
VOUT=3.0V

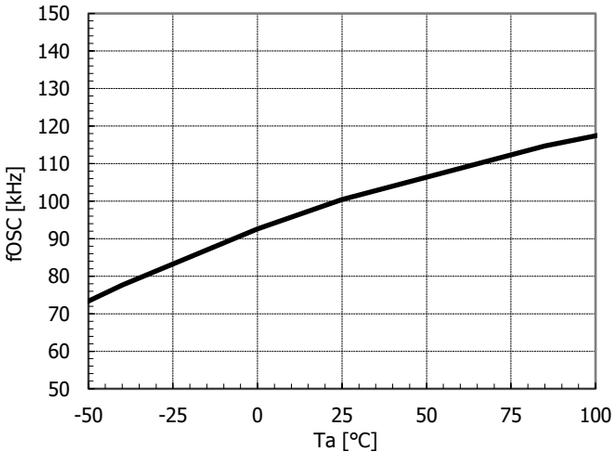

Maximum duty cycle - Temperature
VOUT=3.0V

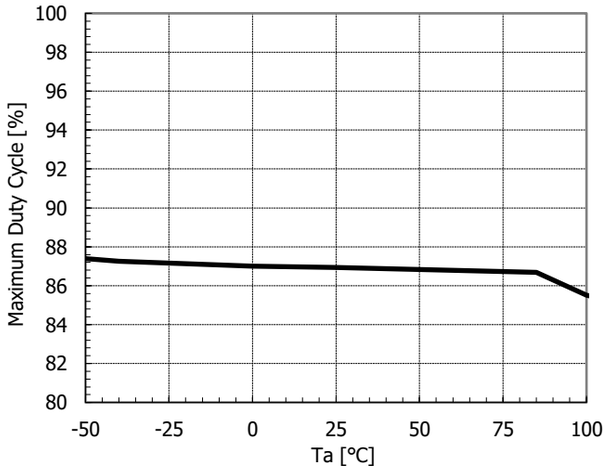

EN pin "High" Input Voltage - Temperature
VEN=0→5.5V

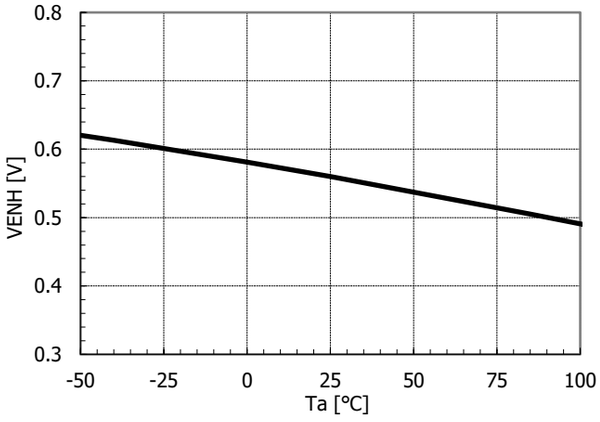

EN pin "Low" Input Voltage - Temperature
VEN=5.5→0V

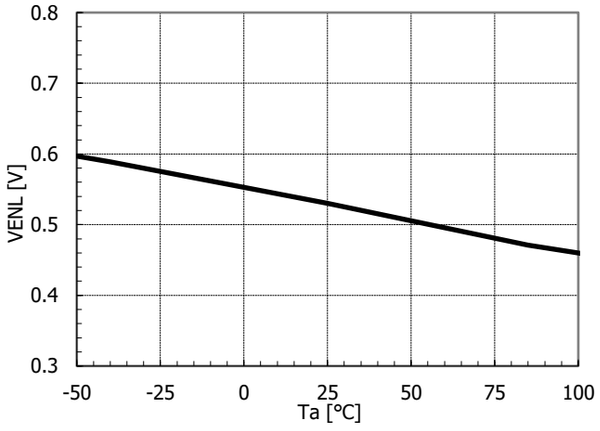

Soft Start Time - Temperature
VIN=0→1.2V, VOUT=3.0V, IOUT=0A

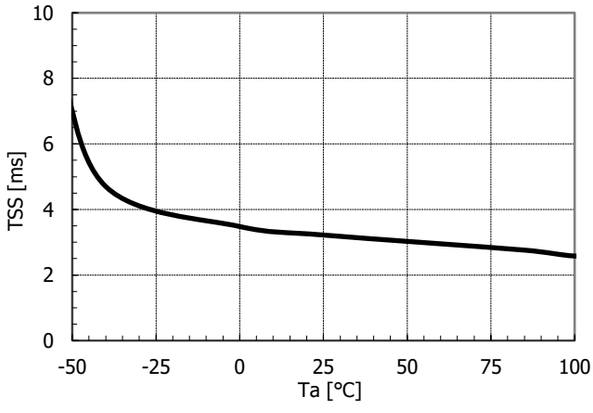

UVLO Detection Voltage - Temperature
VIN=1.2→0.7V

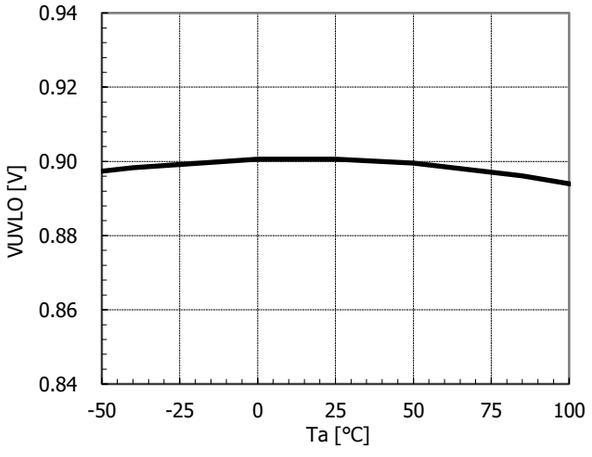

UVLO Hysteresis - Temperature
VIN=0.7→1.2V

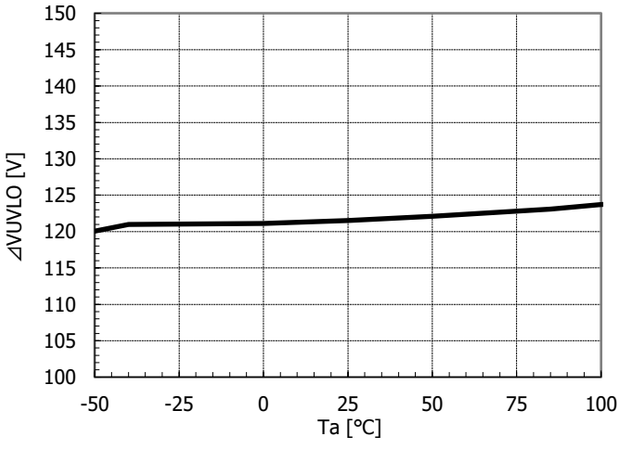

UVLO Dead Time - Temperature
VIN=1.2→0.7V, CCD=0.01uF

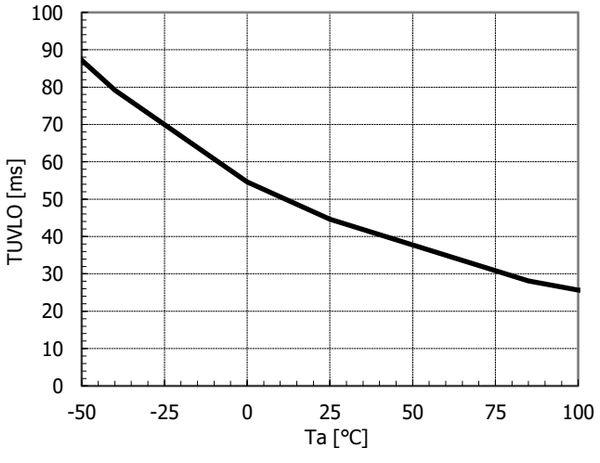

DIMENSIONS

PACKAGE : SOP-8D

UNIT	mm

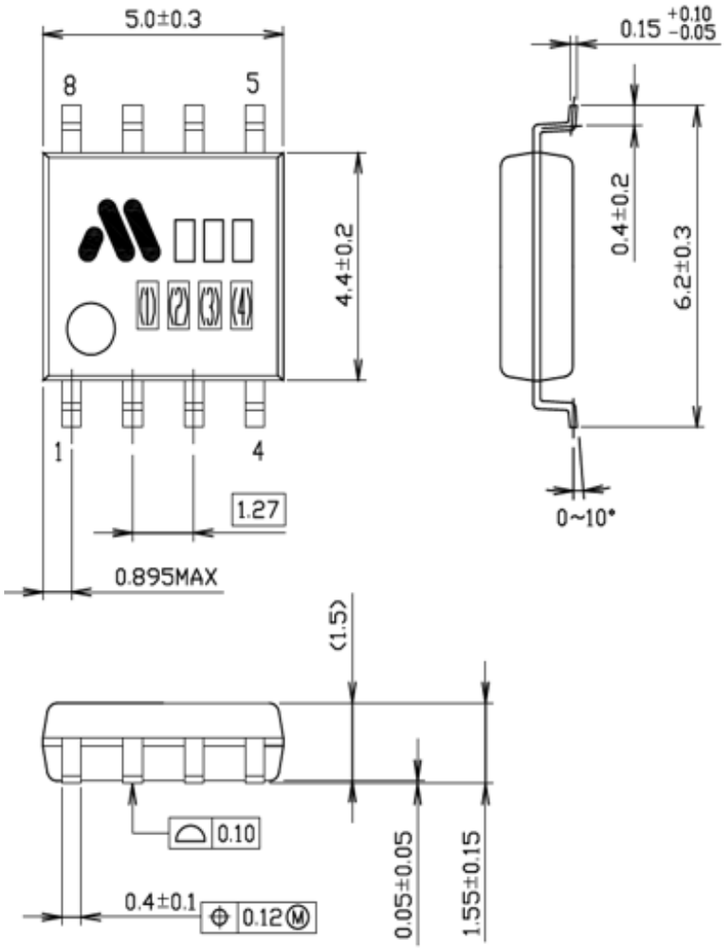

MARKING CONTENTS

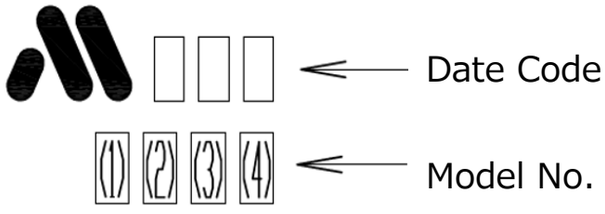

Model name	Model No.			
	(1)	(2)	(3)	(4)
M M 3 3 5 5 A F F E	3	5	5	A