MITSUMI

Boost DC-DC converter IC

MM3333 Series

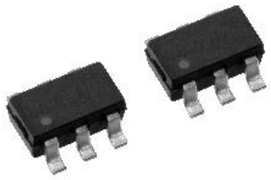

Overview

This IC is a step-up DC-DC converter with PWM / PFM automatic switching function. A step-up DC-DC converter can be configured by using only external coils, capacitors, and diodes. The small package and low current consumption make it ideal for mobile device applications that require high efficiency. In addition, the PWM / PFM automatic switching function prevents the efficiency from decreasing due to the current consumption of the IC when the load is light.

Features

- No need external resistors (buit-in feedback resistors)
- Achieves high efficiency with low current consumption and PFM operation
- Adopt a small package

Application

- Mobile devices
- Power supply for microcomputer

Package

- SOT-26B

Main specifications

- Input voltage range : 1.8V~Vout(Vout≦4.5V)
  2.5~4.2V(Vout=5V)
- Output voltage : 3.0/5.0V（Depends on rank）
- Switching frequency : 250kHz
- Current consumption : 74.3μA typ. (at Vout=3V)
  0.5μA max. (Shutdown)

PIN CONFIGURATION

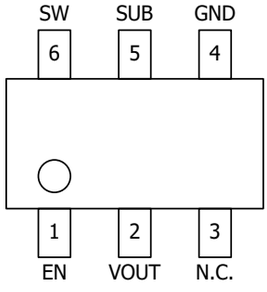

Top view

TERMINAL EXPLANATIONS

PIN No.	SYMBOL	FUNCTION
1	EN	Enable Pin For ON/OFF. Please avoid use in the state that is floating.
2	VOUT	Output Voltage Feedback PIN / VDD PIN.
3	N.C.	No Connection.
4	GND	Ground PIN.
5	SUB	Substrate pin. Connected to IC substrate. Please connect thin pin to ground.
6	SW	Power Switch PIN.

■ All products and company names mentioned herein are trademarks and registered trademarks of their respective owners. 各社の商標または登録商標です。
■ Specifications are subject to change without notice. 仕様は予告なく変更することがあります。
■ The information and circuit examples contained in this document are for reference purposes only. Mitsumi does not guarantee that the information and circuit examples are free from third party intellectual property rights. Mitsumi is not responsible for any damages arising from the use of the information and circuit examples. 本資料に記載の情報は、参考用途のみを目的としたものであり、ミツミが第三者の知的財産権等を許諾するものではありません。ミツミは本資料に記載の情報および回路例の使用に起因する損害に対して責任を負いません。
■ The products listed in this document are intended for use in general electronic equipment. Please contact us before using the products in equipment that requires high reliability, such as medical equipment, aerospace equipment, and automotive equipment. 本資料に掲載の製品は、一般的な電子機器への使用を目的としています。医療機器、航空機器、車載機器など、高い信頼性が要求される機器への使用をご検討の際は、事前にご連絡ください。
■ Please use the products listed in this document within the specified ranges. Please pay special attention to the absolute maximum ratings, operating voltage range, and electrical characteristics. Mitsumi is not responsible for failures occurring outside these ranges. 本資料に掲載の製品は、仕様範囲内でご使用ください。特に絶対最大定格、動作電圧範囲、電気的特性にご注意ください。ミツミは仕様範囲外での故障に対して責任を負いません。
■ Please use the products listed in this document within the specified ranges. Mitsumi assumes no responsibility for failures or accidents caused by use outside the specified ranges. 本資料に掲載の製品は、仕様範囲内でご使用ください。仕様範囲外でご使用された場合、故障、事故に関して、ミツミは責任を負いません。
■ Operation of semiconductor products may cause failures. Please take sufficient safety measures, such as redundancy, fire prevention, and malfunction prevention, when using the products listed in this document. 半導体製品は故障することがあります。本資料に掲載の製品をご使用の際は、冗長設計、延焼対策、誤動作防止などの安全対策を十分にお願いします。
■ The contents described in this document may be changed without notice due to improvements in the products. Please check the latest information before purchasing. 本資料に掲載の内容は、製品改良のため予告なく変更することがあります。ご購入の際は、最新の情報をご確認ください。
■ Please contact us if you have any questions regarding the information described in this document or any other inquiries. 本資料に記載の内容についてご不明な点、その他お問い合わせは、ミツミまでご連絡ください。

MODEL NAME

M M 3 3 3 3 J N R E

Series Name (A) (B) (C) (D)

(A) Output Voltage
J=5.0V / G=4.0V / X=3.2V / C=3.0V
(B) Package Code
(C) Direction in Emboss Cavity
(D) Emboss Tape

BLOCK DIAGRAM

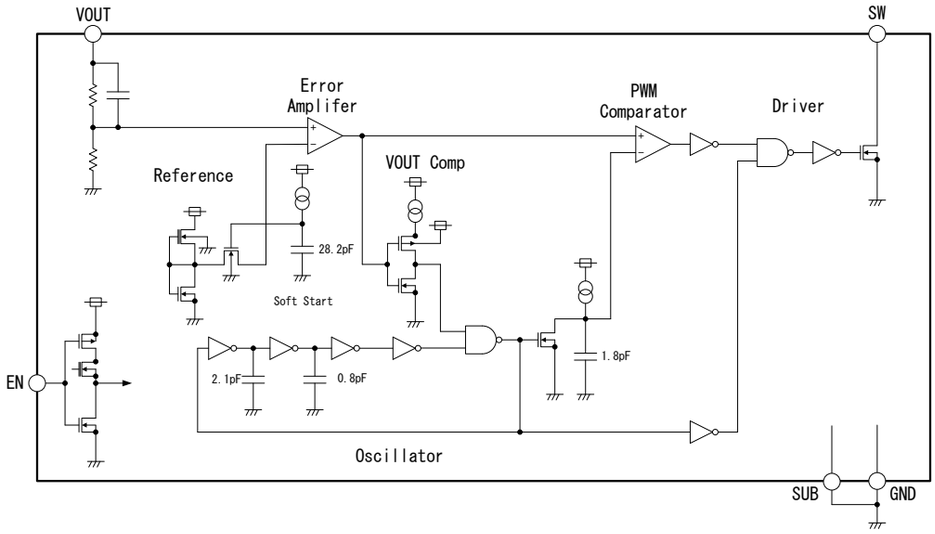

ABSOLUTE MAXIMUM RATINGS

(Ta=25℃ / Ta=25℃, unless otherwise specified)

ITEM	SYMBOL	MIN.	MAX.	UNIT
VOUT pin voltage	V_{OUTM}	-0.3	6	V
EN pin voltage	V_{ENM}	-0.3	6	V
SW pin voltage	V_{SWM}	-0.3	6	V
Storage temperature	T_{STG}	-55	150	℃
Power Dissipation	Pd	-	150 *1	mW

*1 Alone

RECOMMENDED OPERATING CONDITIONS

ITEM	SYMBOL	MIN.	MAX.	UNIT
Operating Ambient temperature	Topr	-40	85	℃
Operating voltage (Vout≦4.5V/Vout=5V)	Vop	1.8/2.5	Vout-0.8	V

ELECTRICAL CHARACTERISTICS

(V_{IN}=2.4V, Ta=25℃ / V_{IN}=2.4V, Ta=25℃, unless otherwise specified)

Parameter	Symbol	Conditions	Min.	Typ.	Max.	Unit
Output voltage (MM3333JN)	V_{OUT}	I_{OUT}=10mA	4.880	5.000	5.120	V
Starting output voltage	V_{ST1}	I_{OUT}=1mA	-	-	1.0	V
Starting oscillator voltage	V_{ST2}	No external parts, measured to voltage by applying V_{OUT}.	-	-	0.8	V
Holding output voltage		Measured by falling V_{IN}.				
Supply current 1	I_{DD1}	V_{OUT}=4.75V	-	88.0	146.6	μA
Supply current 2	I_{DD2}	V_{OUT}=5.5V	-	11.7	23.3	μA
Shutdown current	I_{DD3}	V_{EN}=0V	-	-	0.5	μA
Switching current *1	I_{SW}	V_{SW}=0.4V	293	470	-	mA
Switching transistor leakage current	I_{SWQ}	V_{SW}=V_{OUT}=5.5V	-	-	0.5	μA
Line regulation *1	ΔV_{OUT1}	V_{IN}=2.5V to 3.5V	-	30	60	mV
Load regulation *1	ΔV_{OUT2}	I_{OUT}=0.01mA to 15mA	-	30	60	mV
Output voltage temperature characteristics *1	$\Delta V_{OUT}/\Delta T$	-40℃≦T≦85℃	-	±100	-	ppm/℃
Oscillation frequency	f_{OSC}	V_{OUT}=4.75V	212.5	250	287.5	kHz
Maximum duty cycle	Max Duty	V_{OUT}=4.75V	70	78	85	%
EN pin "High" input voltage	V_{ENH}	V_{EN}=0V to 5.5V	0.9	-	-	V
EN pin "Low" input voltage	V_{ENL}	V_{EN}=5.5V to 0V	-	-	0.3	V
EN pin "High" input current	I_{ENH}	V_{EN}=5.5V	-0.1	-	0.1	μA
EN pin "Low" input current	I_{ENL}	V_{EN}=0V	-0.1	-	0.1	μA
Soft start time	T_{SS}	-	1.8	3.6	7.2	ms
Efficiency *1	EFFI	-	-	85	-	%

*1 The parameter is guaranteed by design.

TEST CIRCUIT

1)

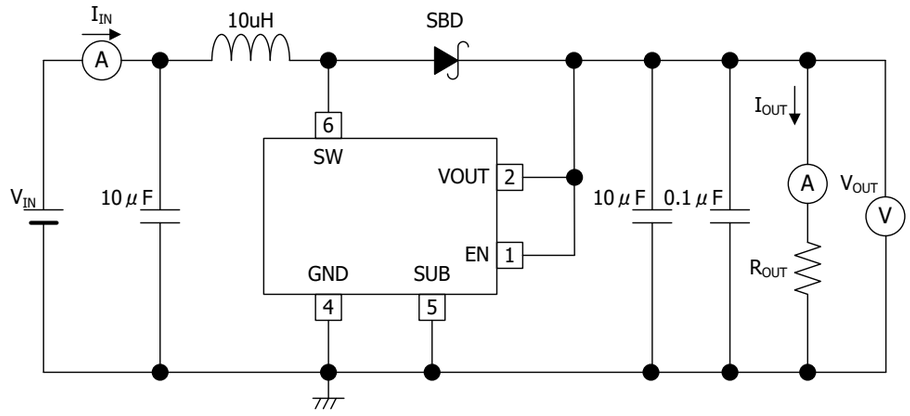

2)

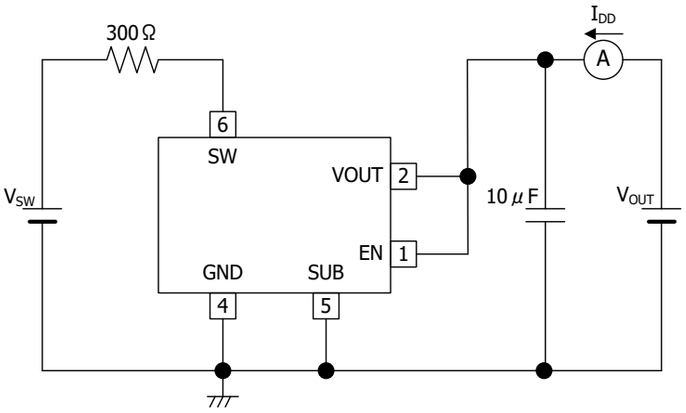

TIMING CHART

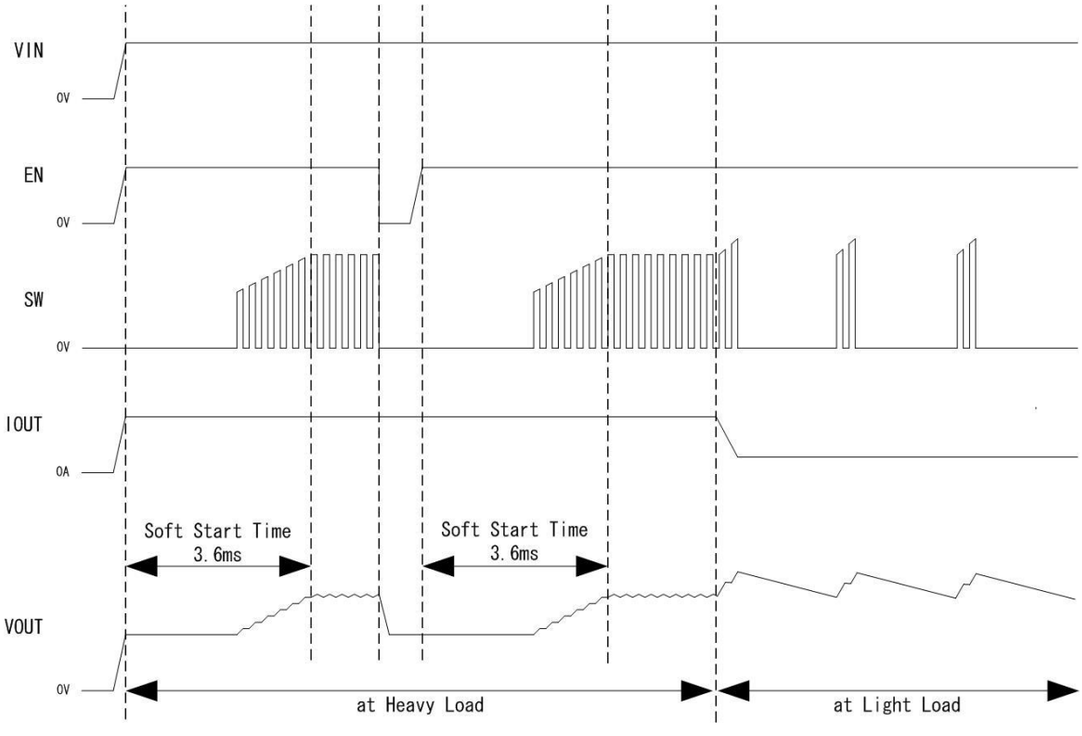

TYPICAL APPLICATION CIRCUIT

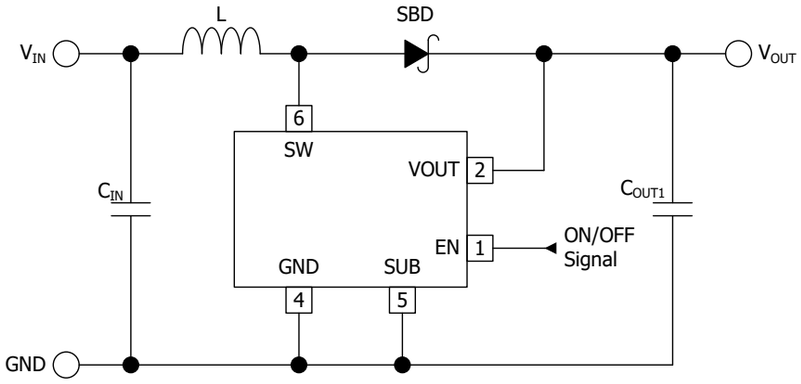

- RECOMMENDED OPERATION CONDITIOS

  V_{IN} : 2.5V～4.2V
  I_{OUT} : 50mA (max.)

- RECOMMENDED PARTS

  C_{IN} : 10μF (LMK107BBJ106MALT)
  C_{OUT1} : 22μF (LMK212BBJ226MG-T)
  L : 10μH (C3-P1.5R)
  SBD : RSX101VA

- NOTICE

  The VOUT may be unstable when it is used except the above operation conditions.
  This circuit doesn't necessarily guarantee to operate. Please perform evaluation sufficient with actual application and determine a external parts.

TYPICAL PERFORMANCE CHARACTERISTICS

Efficiency
VIN=2.5V, 3.6V, 4.2V, Ta=25℃

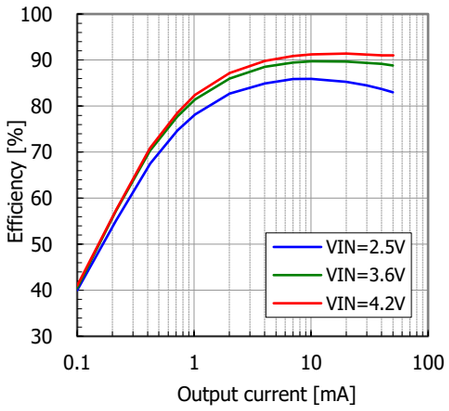

Load regulation
VIN=2.5V, 3.6V, 4.2V, Ta=25℃

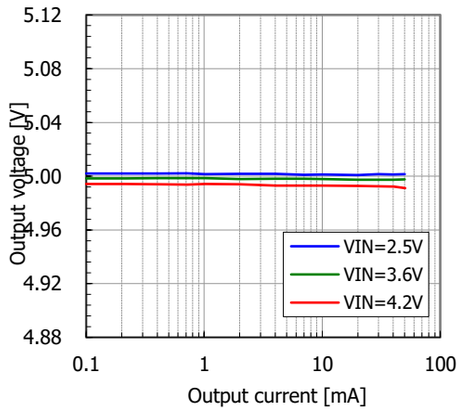

Line regulation
ROUT=500Ω, 5kΩ, Ta=25℃

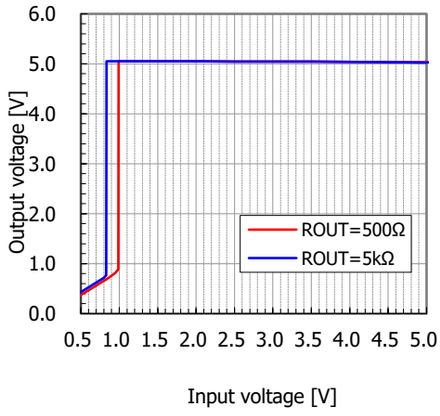

Start up
VIN=0 to 3.6V, EN=VOUT, ROUT=500Ω, Ta=25℃

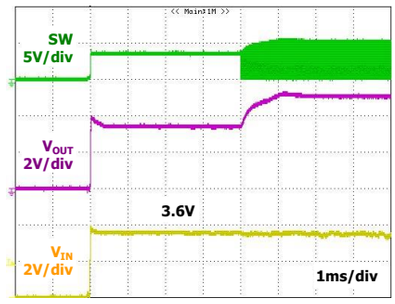

* The values indicate representative values.

MM3333XN (VOUT : 3.2V)

Supply current 1 - Temperature
VOUT=3.0V

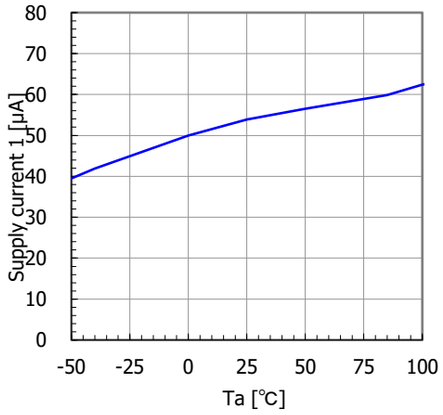

Supply current 2 - Temperature
VOUT=3.7V

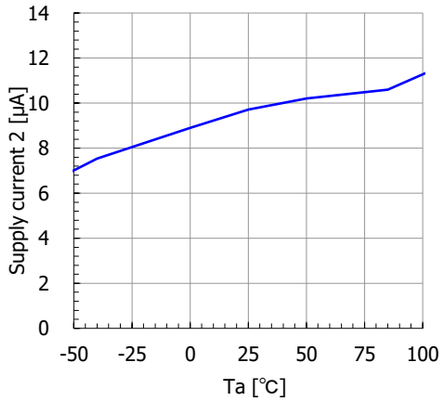

Output voltage - Temperature
VIN=2.4V, IOUT=10mA

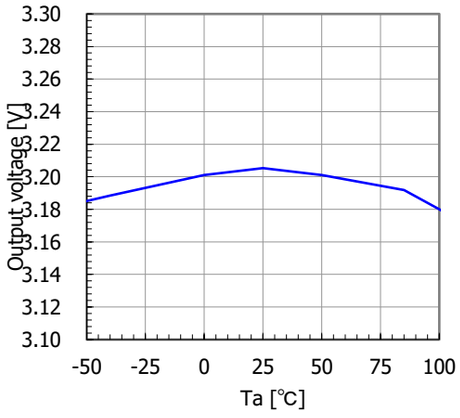

Oscillation frequency - Temperature
VOUT=3.0V

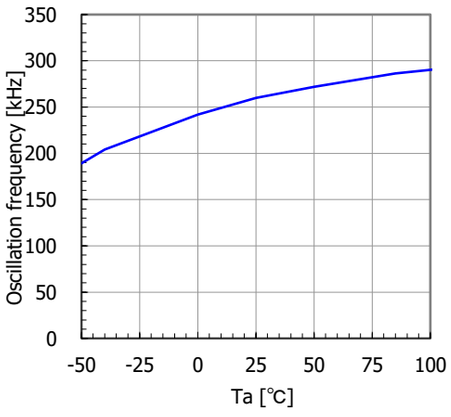

* The values indicate representative values.

DIMENSIONS

PACKAGE : SOT-26B

UNIT	mm

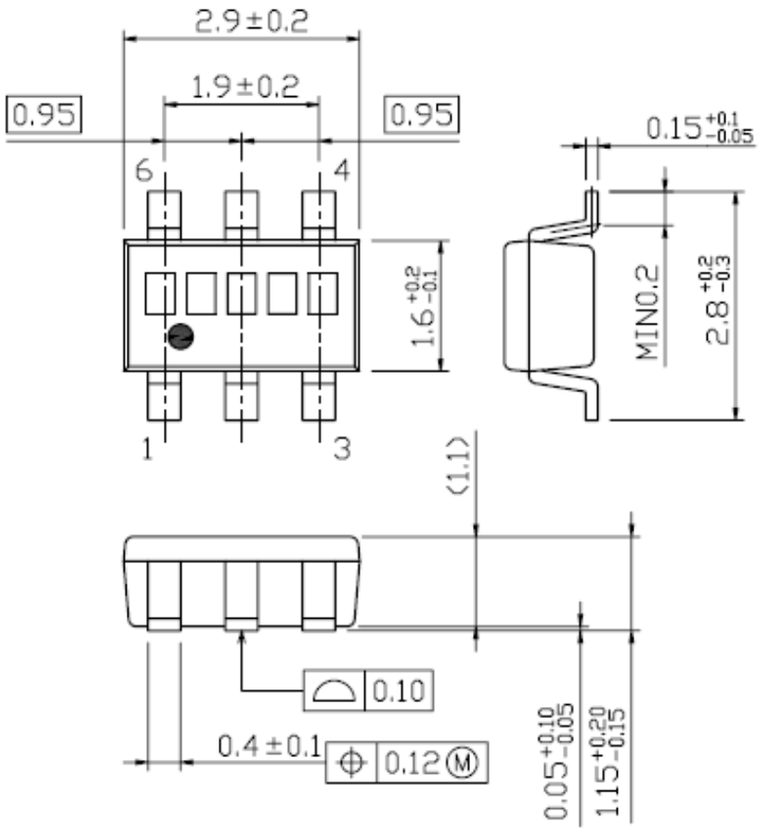

MARKING CONTENTS

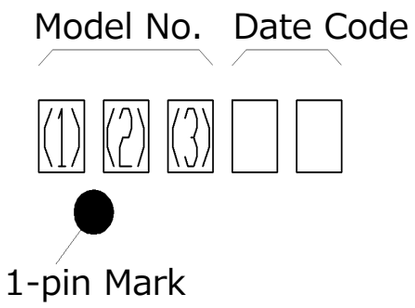

Model name	Model No.		
	(1)	(2)	(3)
M M 3 3 3 3 J N R E	6	1	J