Minebea
Passion to Exceed Precision

NEW

BKL7

■ 外形尺寸(参考) Outside Dimension (Reference)

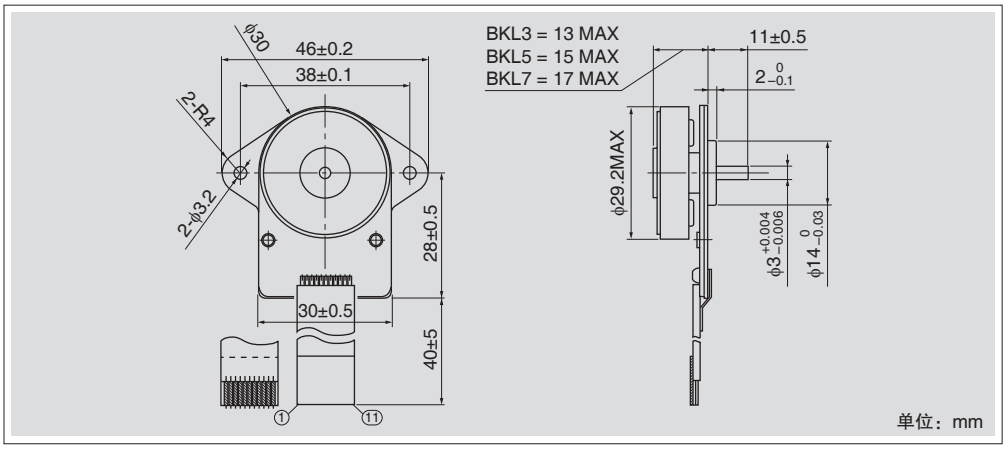

■ 该产品是对应客户需求的定制产品，详细规格及订货量请咨询本公司销售人员。
Please contact our sales for detail specification & order lot QTY. (All custom product by customer's requirement)

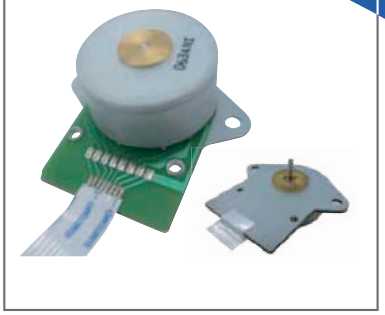

■ 3相外转子型DC无刷直流电机 /
3 Phase outer rotor type DC Brushless Motor

■ 产品特点 Characteristic

・轴承 / Bearing
　可选择含油轴承、滚珠轴承 / Can be select to Oil retaining bearing or Ball bearing
・连接 / Connection
　对应客户需求 / It corresponds to request.
・制动扭矩 / Detent torque
　可根据用户的要求进行调整 / It is possible to adjust the detent torque upon request.



・接口 / Interface
　・绕组端子 / Coil terminal
　・霍尔元件或霍尔IC的输入输出端子 / Input & Output of Hall sensor or Hall IC
・连接 / Circuit
　也可搭载驱动电路 / Can respond to the mounting of the drive IC



・轴 / Shaft
　・可变更长度、选择D形切割形状、追加齿轮等 / It is possible to respond to the change of length, the shape of D-cut, the addition of the gear, etc..
　・出轴方向可选择 / Shaft output direction can be selected up and down.

■ 典型特性 (12V 时) Major Characteristic Parameters (at 12V)

※可通过绕组调整 / Adjustable by winding

项目	典型特性
空载转速 No load speed	3800〔min^{-1}〕
起动扭矩 Starting torque	48〔mN・m〕
起动电流 Starting current	1600〔mA〕
最大效率 Starting torquey	72〔%〕
最大效率时转速 Speed at maximal efficiency	3200〔min^{-1}〕
最大输出 Maximum output power	4.8〔W〕
最大输出时转速 Speed at max output power	1800〔min^{-1}〕
寿命 (20℃时)	5000〔hour〕

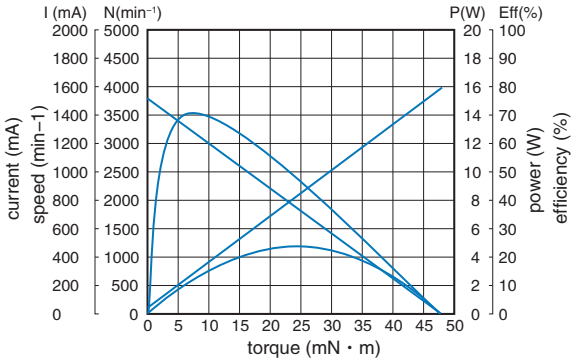

Copyright Minebea Co., Ltd.