Minebea
Passion to Exceed Precision

BCL3 带齿轮电机

■ 外形尺寸(参考) Outside Dimension (Reference)

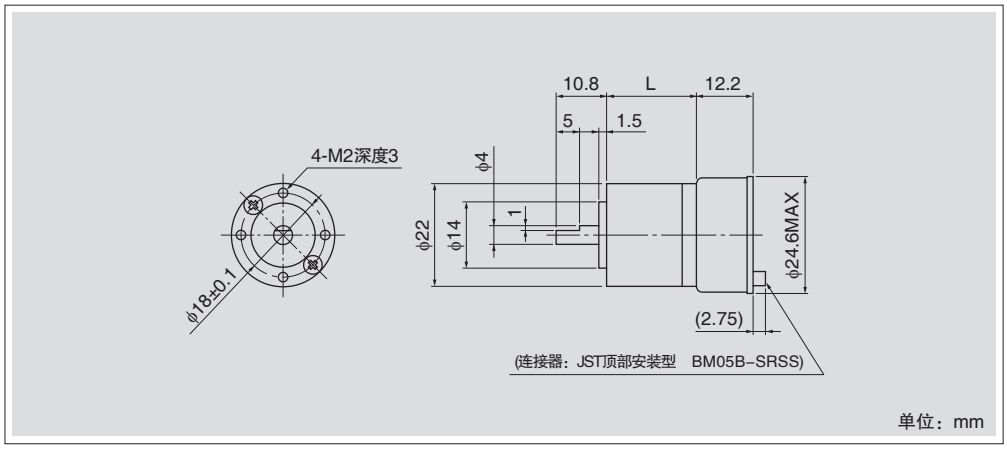



■ 该产品是对应客户需求的定制产品，详细规格及订货量请咨询本公司销售人员。
Please contact our sales for detail specification & order lot QTY. (All custom product by customer's requirement)

■ 3相外转子型DC无刷直流电机 /
3 Phase outer rotor type DC Brushless Motor

■ Gear Unit : PG-22 Type

Metal gear

Gear ratio	Rated Load Torque	Max Torque	Dimension L	Effciency
	mN・m	mN・m	mm	%
1/4	49	73.5	13.1	85
1/16	73.5	110.3	16.2	72
1/24	73.5	110.3	16.2	72
1/64	98	147	19.3	61
1/96	98	147	19.3	61

Plastic gear

Gear ratio	Rated Load Torque	Max Torque	Dimension L	Effciency
	mN・m	mN・m	mm	%
1/4	24.5	39.2	13.1	85
1/16	34.3	58.5	16.2	72
1/24	34.3	58.8	16.2	72



■ BLDC motor : BCL3 Type

※可通过绕组调整 / Adjustable by winding

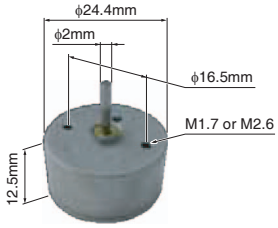

・Interface
  ・Power Supply
  ・GND
  ・FG
  ・VSP or PWN
  ・CW / CCW switch
・Connection Connector / 端子



JST : BM05B-SRSS-TB
or
JCTC : 11002W00-5P-S

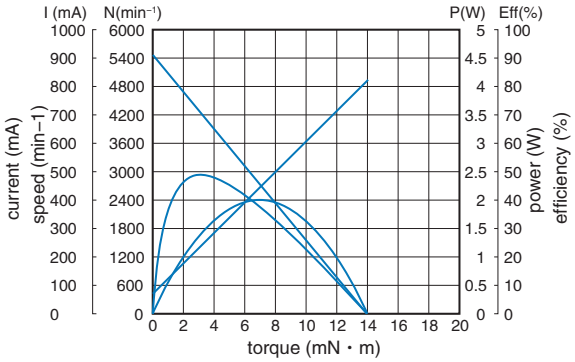

Copyright Minebea Co., Ltd.