Minebea
Passion to Exceed Precision

滚柱轴承

单列 **自动调心**

■ 外观图 Outline

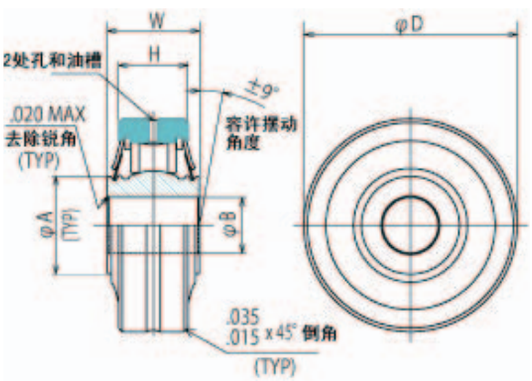

单位：mm

■ 产品材质 Materials

	ASR	ASR–CR
外圈	52100镀镉 (AMS–QQ–P–416Ty.I, Cl.2)	440C镀镉 (AMS–QQ–P–416Ty.II, Cl.2)
内圈	52100镀镉 (AMS–QQ–P–416Ty.I, Cl.2)	440C镀镉 (AMS–QQ–P–416Ty.II, Cl.2)
辊	52100	440C
封盖	300 或400 CRES	300 或400 CRES
密封圈	特氟龙®/玻璃	特氟龙®/玻璃

■ 型号编号示例 Description of Types

ASR xx CR H R –1 –A –Q

- –Q → AMS–QQ–P–416 Ty. II Cl. 2时追加标记 “Q”
- –A → 尺寸
- –1 → 基本型式名
- R → 标准间隙时省略该标记
低间隙时追加标记 “R”
预压时追加标记 “P”
- H → MIL–PRF–81322时省略该标记
MIL–PRF–23827时追加标记 “H”
- CR → 材质
- xx → 内径尺寸
- ASR → 基本型号名称

■ 产品规格 Specifications

单位：mm

型号编号	B	D	W	H	A	P°	额定静负载		摆动负载	重量
							径向	轴向		
	Inch +.0000 –.0005	Inch +.0000 –.0005	Inch +.000 –.005	Inch +.000 –.005	Inch ± .005	MIN	LBS	LBS	LBS	LBS
ASR3–1	.1900	1.0000	.500	.344	.420	10	3,000	300	2,650	.07
ASR3–1A	.1900	1.0000	.500	.344	.420	10	3,000	300	2,650	.07
ASR4–1	.2500	1.0000	.500	.344	.420	10	3,000	300	2,650	.06
ASR4–1A	.2500	1.0000	.500	.344	.420	10	3,000	300	2,650	.06
ASR4–2A	.2500	.7500	.313	.250	.384	5	1,200	120	1,000	.03
ASR4–3A	.2500	.8750	.313	.250	.520	5	2,060	200	1,710	.04
ASR4–4A	.2500	.9014	.484	.335	.380	10	1,900	190	1,580	.05
ASR5–1	.3125	1.2500	.588	.375	.550	10	4,210	420	3,490	.12
ASR5–1A	.3125	1.2500	.558	.375	.550	10	4,210	420	3,490	.12
ASR6–1	.3750	1.4375	.620	.469	.660	10	6,160	610	5,120	.17
ASR6–1A	.3750	1.4375	.620	.469	.660	10	6,160	610	5,120	.17
ASR6–2A	.3750	.8750	.313	.250	.520	5	2,060	200	1,710	.04
ASR6–3A	.3750	1.5000	.660	.578	.800	5	8,890	880	7,380	.16
ASR7–1	.4375	1.5000	.812	.625	.660	10	7,900	790	6,550	.30
ASR7–1A	.4375	1.5000	.812	.625	.660	10	7,900	790	6,550	.30
ASR8–1	.5000	1.6250	.750	.687	.810	2.5	11,900	1,190	9,940	.37
ASR8–1A	.5000	1.6250	.750	.687	.810	2.5	11,900	1,190	9,940	.37
ASR9–2A	.5625	1.6250	.750	.687	.810	2.5	11,900	1,190	9,940	.35
ASR10–2A	.6250	1.1250	.313	.250	.770	3.5	2,130	210	1,760	.05
ASR10–3A	.6250	1.1250	.375	.315	.770	3.5	3,920	390	3,260	.06
ASR16–2A	1.0000	2.0000	.812	.625	1.325	5	14,900	1,490	12,300	.48
ASR22–2A	1.3750	*2.7500	.650	.500	1.860	1	17,900	1,790	14,800	.64

*tolerance Inch:+.0000/–.0007

Copyright Minebea Co., Ltd.

Minebea
Passion to Exceed Precision

滚柱轴承

单列 **自动调心**

■ 产品规格 Specifications

单位：mm

型号编号	内部间隙			MS NO.
	标准径向间隙	低径向间隙	预压 径向	
	Inch	Inch	LBS	
ASR3–1	.0006–.0014			MS21431–3
ASR3–1A	.0006–.0014	.0002–.0010	0–120	
ASR4–1	.0006–.0014			MS21431–4
ASR4–1A	.0006–.0014	.0002–.0010	0–120	
ASR4–2A	.0006–.0014	.0002–.0010	0–48	
ASR4–3A	.0006–.0014	.0002–.0010	0–82	
ASR4–4A	.0006–.0014	.0002–.0010	0–76	
ASR5–1	.0006–.0014			MS24431–5
ASR5–1A	.0006–.0014	.0002–.0010	0–168	
ASR6–1	.0006–.0014			MS21431–6
ASR6–1A	.0006–.0014	.0002–.0010	0–246	
ASR6–2A	.0006–.0014	.0002–.0010	0–82	
ASR6–3A	.0006–.0014	.0002–.0010	0–356	
ASR7–1	.0006–.0014			MS21431–7
ASR7–1A	.0006–.0014	.0002–.0010	0–316	
ASR8–1	.0006–.0014			MS21431–8
ASR8–1A	.0006–.0014	.0002–.0010	0–476	
ASR9–2A	.0006–.0014	.0002–.0010	0–476	
ASR10–2A	.0006–.0014	.0002–.0010	0–85	
ASR10–3A	.0006–.0014	.0002–.0010	0–157	
ASR16–2A	.0006–.0014	.0002–.0010	0–596	
ASR22–2A	.0008–.0016	.0004–.0012	0–716	

■ 注释 Notes

(1) 高亮部分为适用AS8914的型号。
(2) 不锈钢系列产品的容许负载的详情请联系我们。
(3) 电镀对象为除内径以外的外露部位。

■ 产品特点 Notes

自动调心

Copyright Minebea Co., Ltd.