AC Detection + Power Protection

MM3313 series



Outline

The MM3313 is an IC providing AC input detection and power supply protection for AC power supplies. It provides three detection functions of overvoltage protection and output voltage drop for PFC, etc. required for AC power supplies, and AC input
detachment, and allows a protection circuitry to be configured with small component count. In addition, accurate detection can be achieved by integrating the functions into an IC, and standby power can be reduced by lowering current consumption. This IC uses SOP-8 package and supports flow conditions.

Features

- High accuracy detection voltage : 2.5V +/-2%(DET1,DET2)
  1.25v +/-2%(AC DET)
- Low current consumption : 60μA typ.
- High input impedance (CMOS input) : Input bias current below 0.1uA
- Supports high voltage and wide input voltage range : 4~30V
- Includes a delay circuit and latch function (DET1)
- Package : SOP-8D

Applications

- Flat TVs (LCD, OEL)
- Personal computers
- Printers

  AC power supplies using a PFC circuit

Package

- SOP-8D

MinebeaMitsumi
Passion to Create Value through Difference

Mitsumi Search
https://mtm-sec.mitsumi.co.jp/web/ic/

Mitsumi Electric CO.,LTD.
Semiconductor Business Division
Strategy Engineering Department
tel:+81-46-230-3470

■ All brand names, logos, product names, trade names and service names described here are trademarks or registered trademarks of their respective companies or organizations.
■ Any products mentioned in this leaflet are subject to any modification in their appearance and others for improvements without prior notification.
■ The details listed here are not a guarantee of the individual products at the time of ordering. When using the products, you will be asked to check their specifications.

Feb, 2022 Rev.0

Equivalent Circuit Diagram

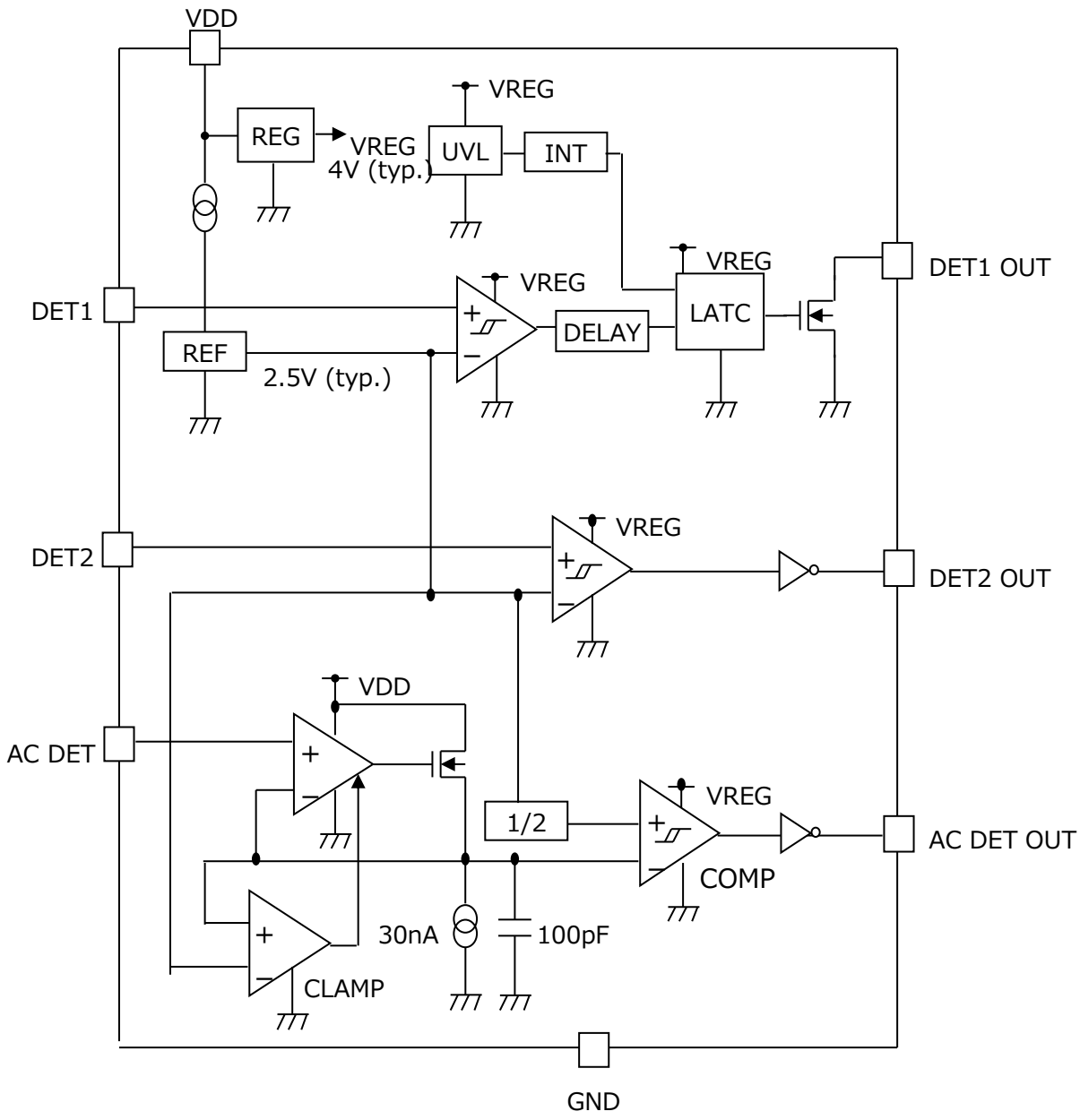

Pin configrations

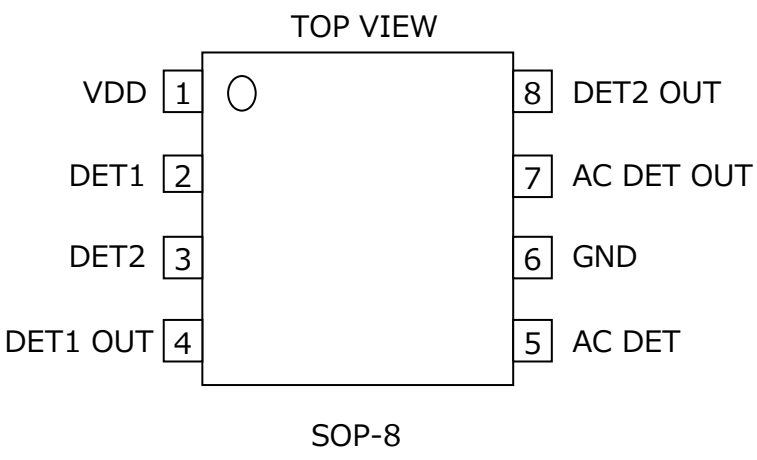

Pin explanations□

PIN No.	PIN NAME	INPUT / OUTPUT	PIN DESCRIPTION	EQUIVALENT CIRCUIT
1	VDD	INPUT	Power supply	
2	DET1	INPUT	Power supply detection input1 (with latch function)	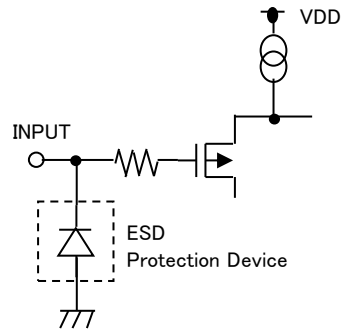
3	DET2	INPUT	Power supply detection input2	
4	DET1 OUT	OUTPUT	Power supply detection output1 (with latch function/open drain)	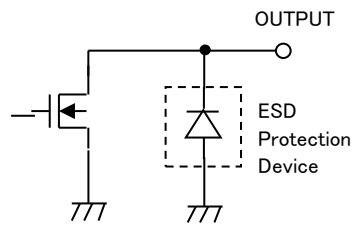
5	AC DET	INPUT	AC detection input	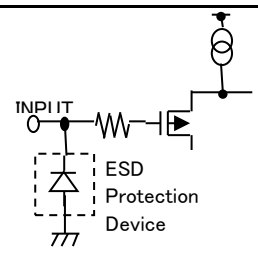
6	GND	-	GND	
7	AC DET OUT	OUTPUT	AC detection output	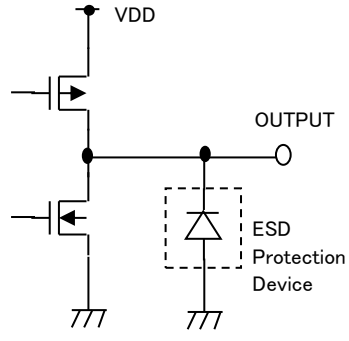
8	DET2 OUT	OUTPUT	Power supply detection output2	

ABSOLUTE MAXIMUM RATINGS

(Ta=25℃)

PARAMETER	SYMBOL	RATING	UNIT
Storage temperature	TSTG	-55 ～ +150	℃
VIN Supply voltage	VVDDMAX	-0.3 ～ +33	V
DET1 pin supply voltage	VINDET1	-0.3 ～ +30	V
DET2 pin supply voltage	VINDET2	-0.3 ～ +30	V
AC DET pin supply voltage	VINACDET	-0.3 ～ +30	V
Power dissipation	Pd	300 (alone)	mW

*When in use, make sure that the voltage exceeding the maximum rating of 33V is not applied even momentarily.

RECOMMENDED OPERATING CONDITIONS

PARAMETER	SYMBOL	RATING	UNIT
Operating Temperature	TOPR	-40 ～ +85	℃
Operating Supply Voltage	VOPR	+4 ～ +30	V
DET1 pin supply voltage	VINDET1	0 ～ +30	V
DET2 pin supply voltage	VINDET2	0 ～ +30	V
AC DET pin supply voltage	VINACDET	0 ～ +30	V

Electorical Characteristics

(unless otherwise specified, Ta=+25℃, VDD=12V)

PARAMETER	SYMBOL	TEST CONDITIONS	CIRCUIT	MIN	TYP	MAX	UNIT
Power supply current	I_{DD}		①	–	60	85	μA
UVLO							
Under voltage lockout (UVLO)	V_{UVLO}	VDD=H→L	①	3.35	3.50	3.65	V
Under voltage lockout hysteresis voltage	$V_{hysUVLO}$	VDD=H→L→H	①	–	100	–	mV
DET1							
DET1 detection voltage	V_{INDET1}	DET1=L→H	①	2.45	2.50	2.55	V
DET1 detection temperature coefficient	$V_{DET1temp}$	(guaranteed by design)	①	-	±100	-	ppm/℃
DET1 detection hysteresis voltage	$V_{hysDET1}$	DET1=L→H→L (guaranteed by design)	①	–	15	–	mV
DET1 pin bias current	$I_{BINDET1}$		①	–	–	0.1	uA
DET1 OUT pin output delay time	$t_{OUTDET1DLY}$		②	0.25	0.5	1.0	ms
DET1 OUT pin output sink current	$I_{OUTDET1SY}$	DET1 OUT=0.5V	③	5	10	–	mA
DET1 OUT pin off leakage current	$I_{OUTDETLEAK}$	DET1 OUT=12V	③	-	-	1	μA
DET1 OUT pin "L" voltage	$V_{OUTDET1L}$	$I_{OUTDET1SY}$=1mA	③	-	-	0.2	V

(unless otherwise specified, Ta=+25℃, VDD=12V)

PARAMETER	SYMBOL	TEST CONDITIONS	CIRCUIT	MIN	TYP	MAX	UNIT
DET2							
DET2 detection voltage	V_{INDET2}	DET2=L→H	①	2.45	2.50	2.55	V
DET2 detection temperature coefficient	$V_{DET2temp}$	(guaranteed by design)	①	-	±100	-	ppm/℃
DET2 detection hysteresis voltage	$V_{hysDET2}$	DET2=L→H→L	①	–	15	–	mV
DET2 pin bias current	$I_{BINDET2}$		①	–	–	0.1	uA
DET2 OUT pin output source current	$I_{OUTDET2SO}$	DET2 OUT=VDD-1V	③	5	10	–	mA
DET2 OUT pin output sink current	$I_{OUTDET2SY}$	DET2 OUT=0.5V	③	5	10	–	mA
DET2 OUT pin "H" voltage	$V_{OUTDET2H}$	$I_{OUTDET2SO}$=1mA	③	VDD -0.2	-	-	V
DET2 OUT pin "L" voltage	$V_{OUTDET2L}$	$I_{OUTDET2SY}$=1mA	③	-	-	0.2	V

(unless otherwise specified, Ta=+25℃, VDD=12V)

PARAMETER	SYMBOL	TEST CONDITIONS	CIRCUIT	MIN	TYP	MAX	UNIT
AC DET							
AC DET detection voltage	V_{INAC}	AC DET=H→L	①	1.225	1.25	1.275	V
AC DET pin input voltage range (DC)	$V_{INACRANGE1}$		①	0	–	30	V
AC DET detection temperature coefficient	V_{ACtemp}	(guaranteed by design)	①	-	±100	-	ppm/℃
AC DET detection hysteresis voltage	V_{hysAC}	AC DET=H→L→H	①	240	300	360	mV
AC DET pin bias current	I_{BINAC}		①	–	–	0.1	uA
AC DET OUT pin output delay time	$t_{OUTACDLY}$	AC DET=10→0V	②	19.2	28.8	38.4	ms
AC DET OUT pin output source current	$I_{OUTACSO}$	AC DET OUT=VDD-1V	③	5	10	–	mA
AC DET OUT pin output sink current	$I_{OUTACSY}$	AC DET OUT=0.5V	③	5	10	–	mA
AC DET OUT pin "H" voltage	V_{OUTACH}	$I_{OUTACSO}$=1mA	③	VDD -0.2	-	-	V
AC DET OUT pin "L" voltage	V_{OUTACL}	$I_{OUTACSY}$=1mA	③	-	-	0.2	V

TEST CIRCUITS

①

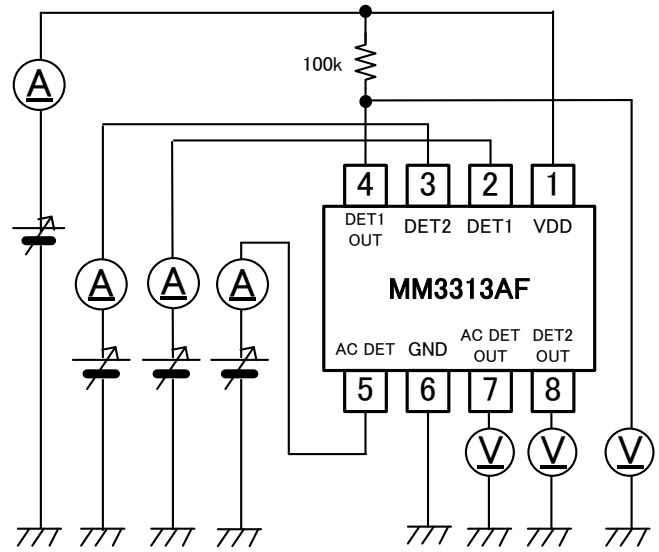

②

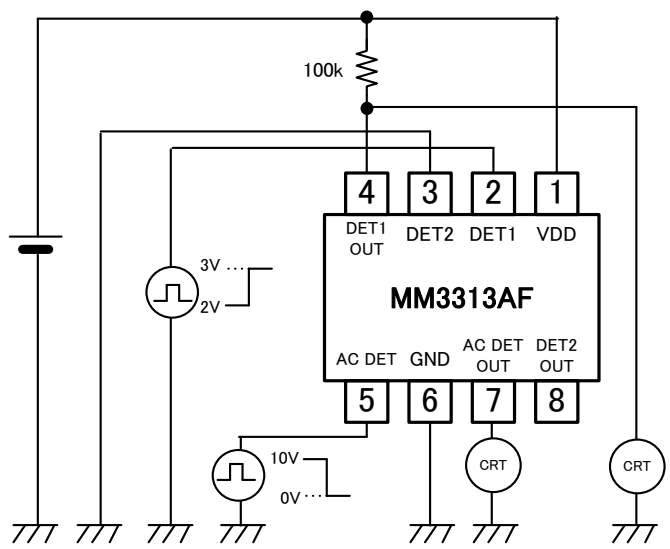

③

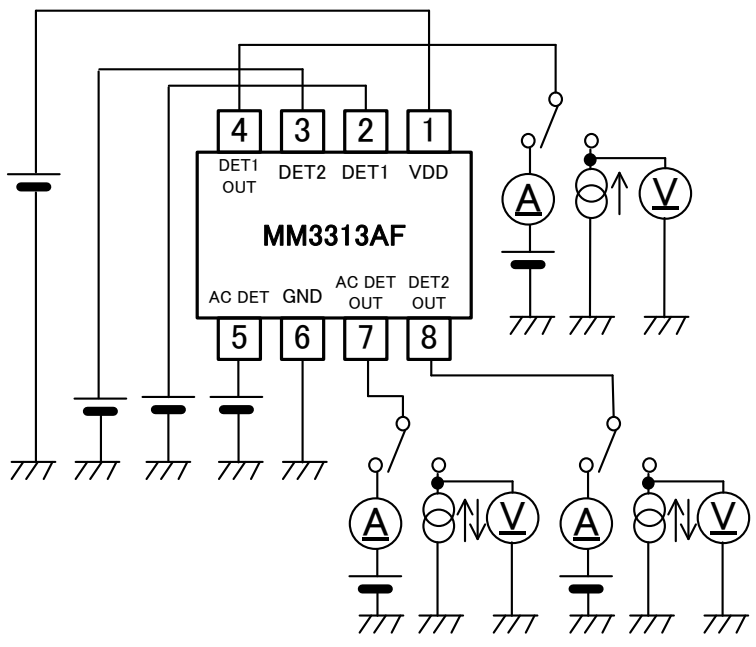

TIMING CHART

AC DET→AC DET OUT

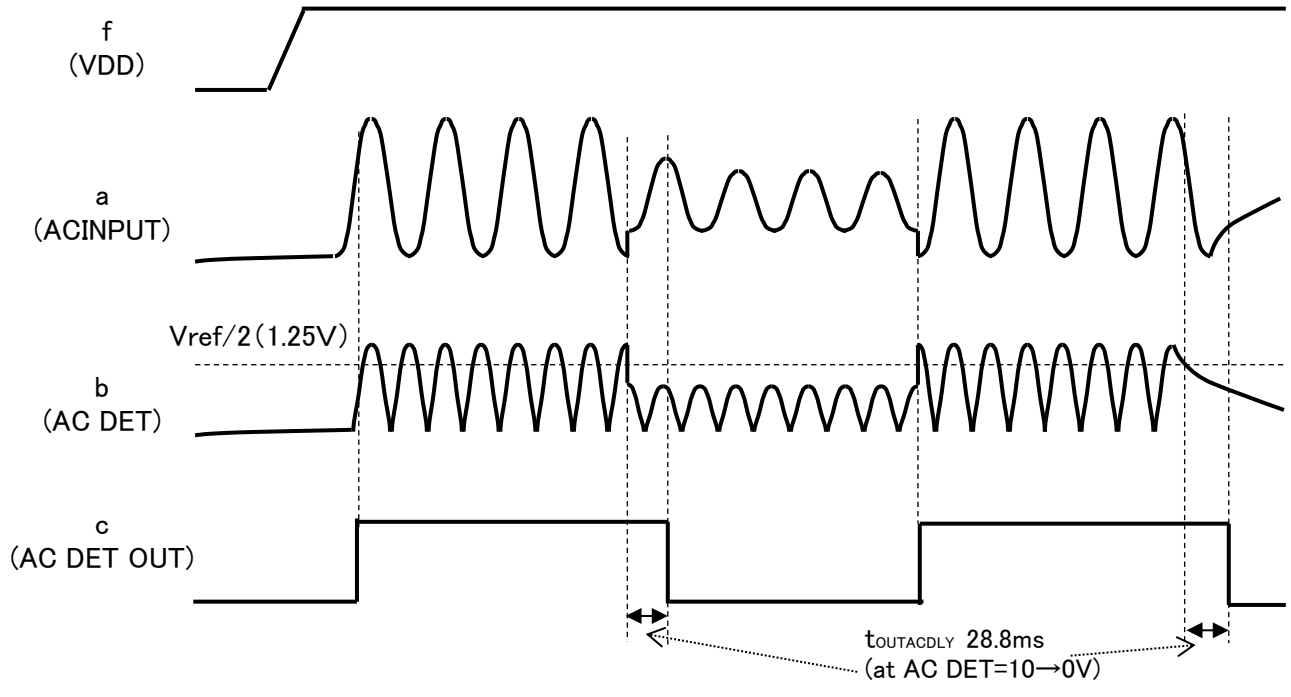

AC DET詳細

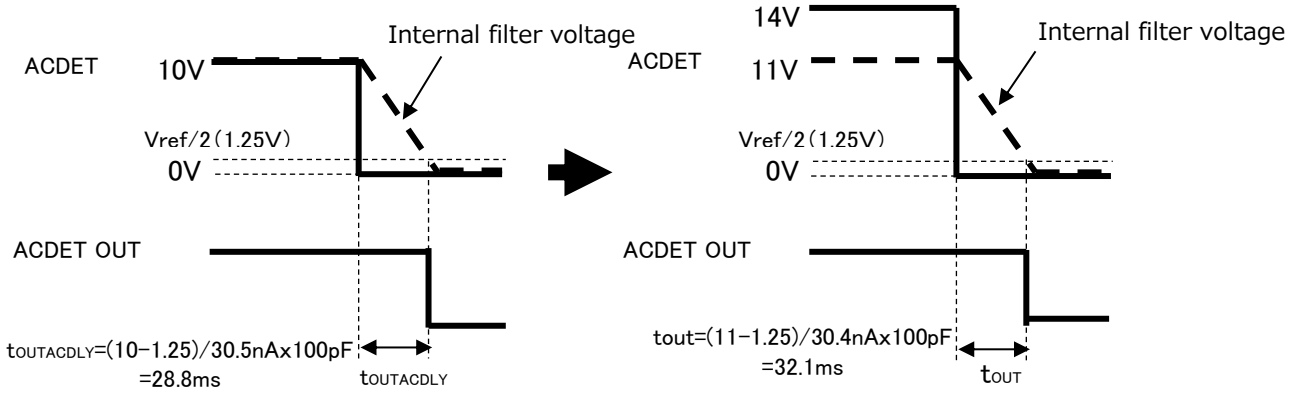

* When AC DET = 11V or higher, the delay time is constant due to the internal clamp circuit.

DET2→DET2 OUT

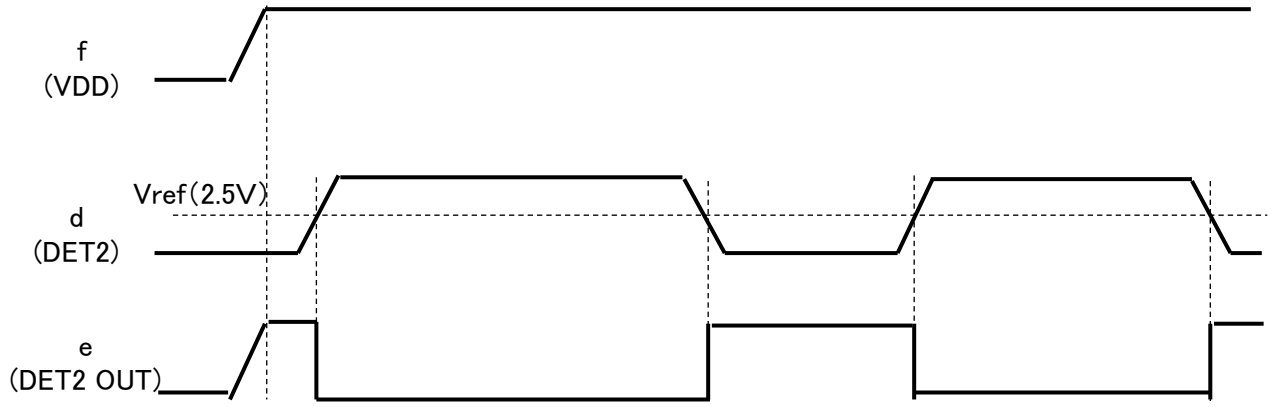

DET1→DET1 OUT

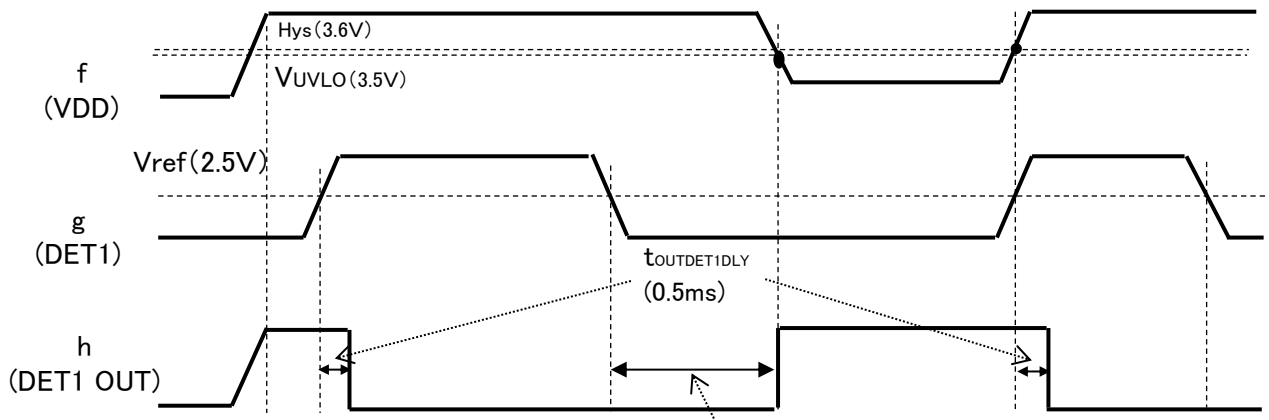

* For waveforms a to g, refer to the symbols in the application circuit example.

Application Circuits

(1) Architecture example

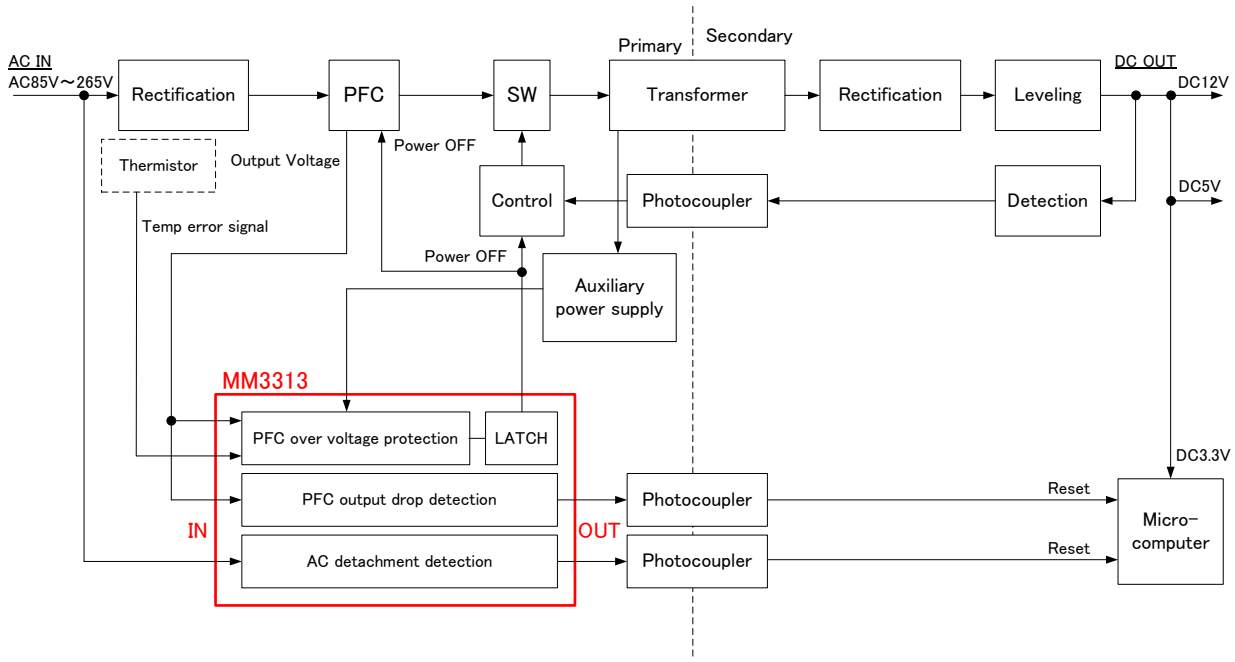

(2) Circuit example (current resonant scheme)

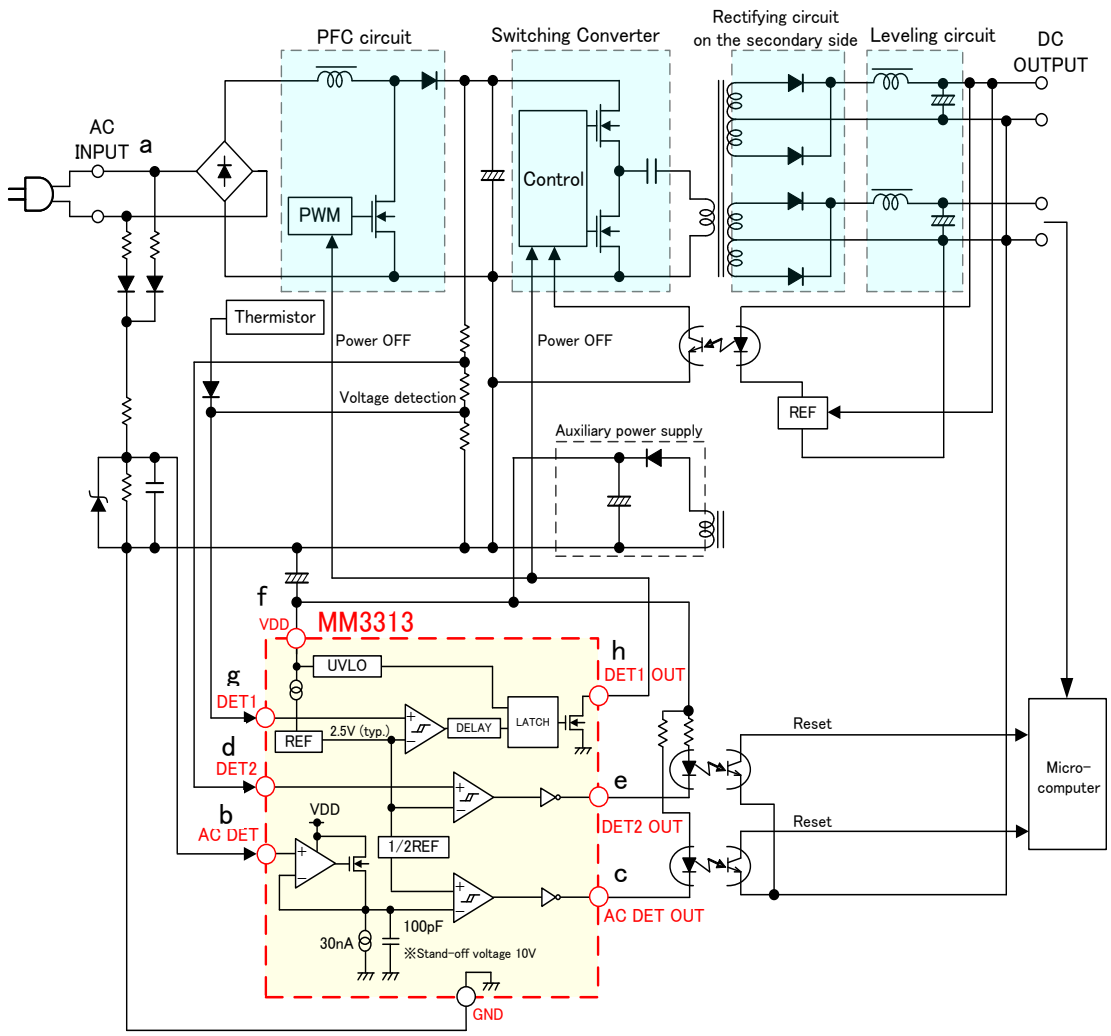

* Set the VDD decap in the range of 0.1 to 10 μF depending on the power supply condition.

CHARACTERISTIC DATA (for example)

(VDD=12V)

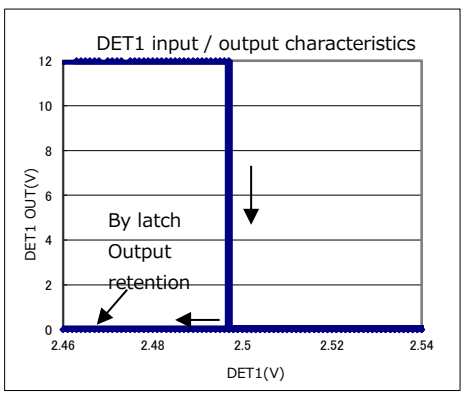

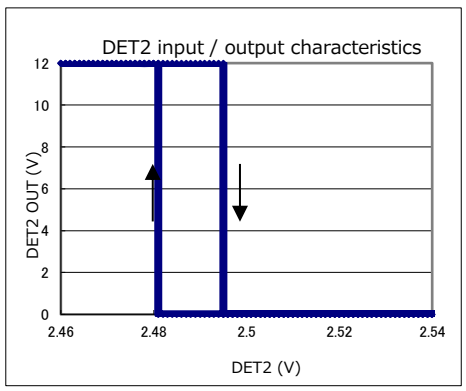

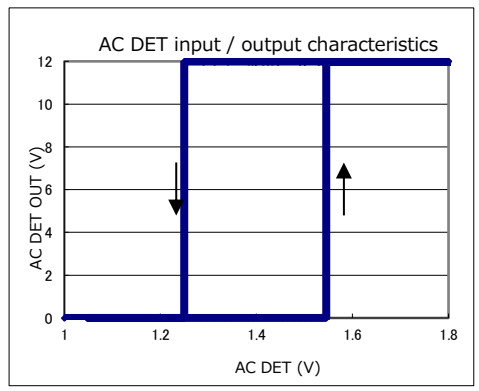

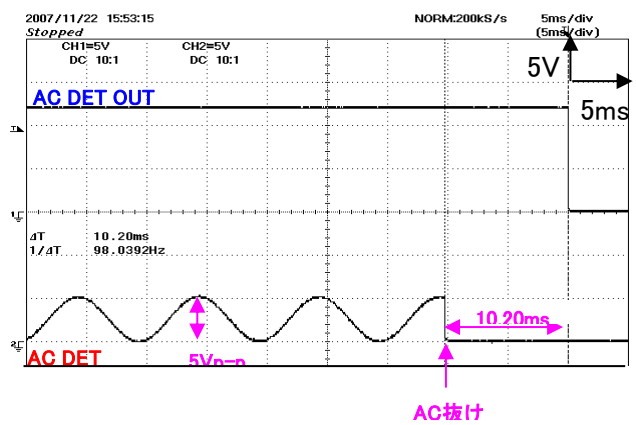

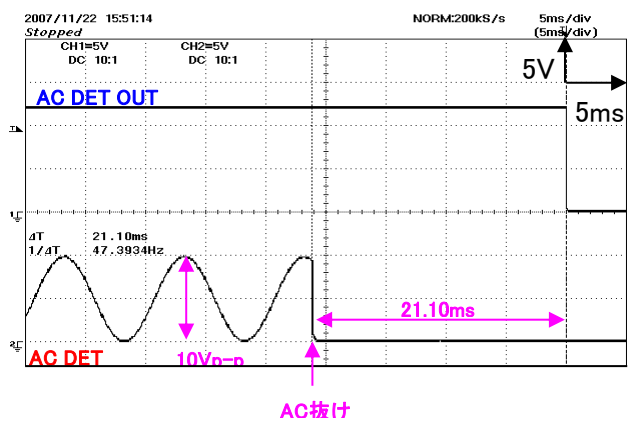

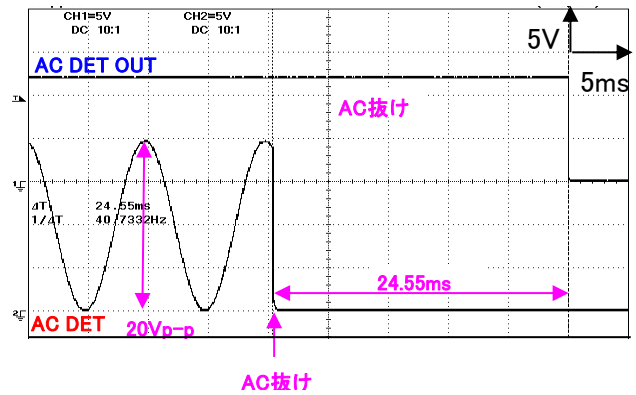

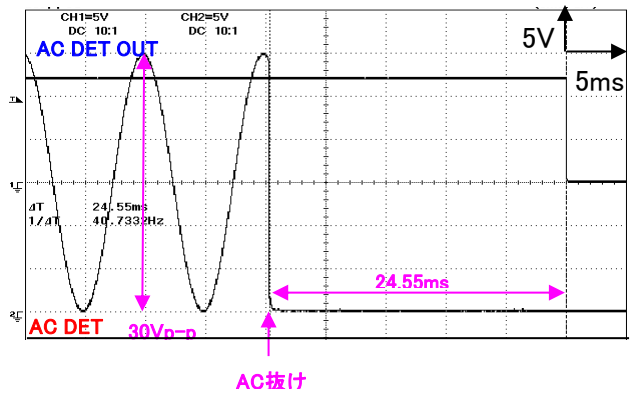

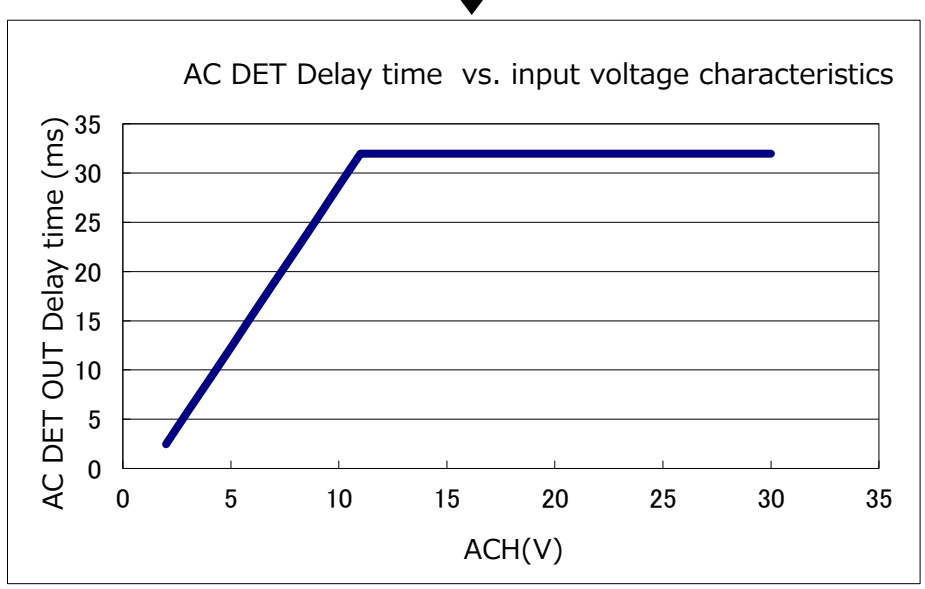

Demensions

(mm)

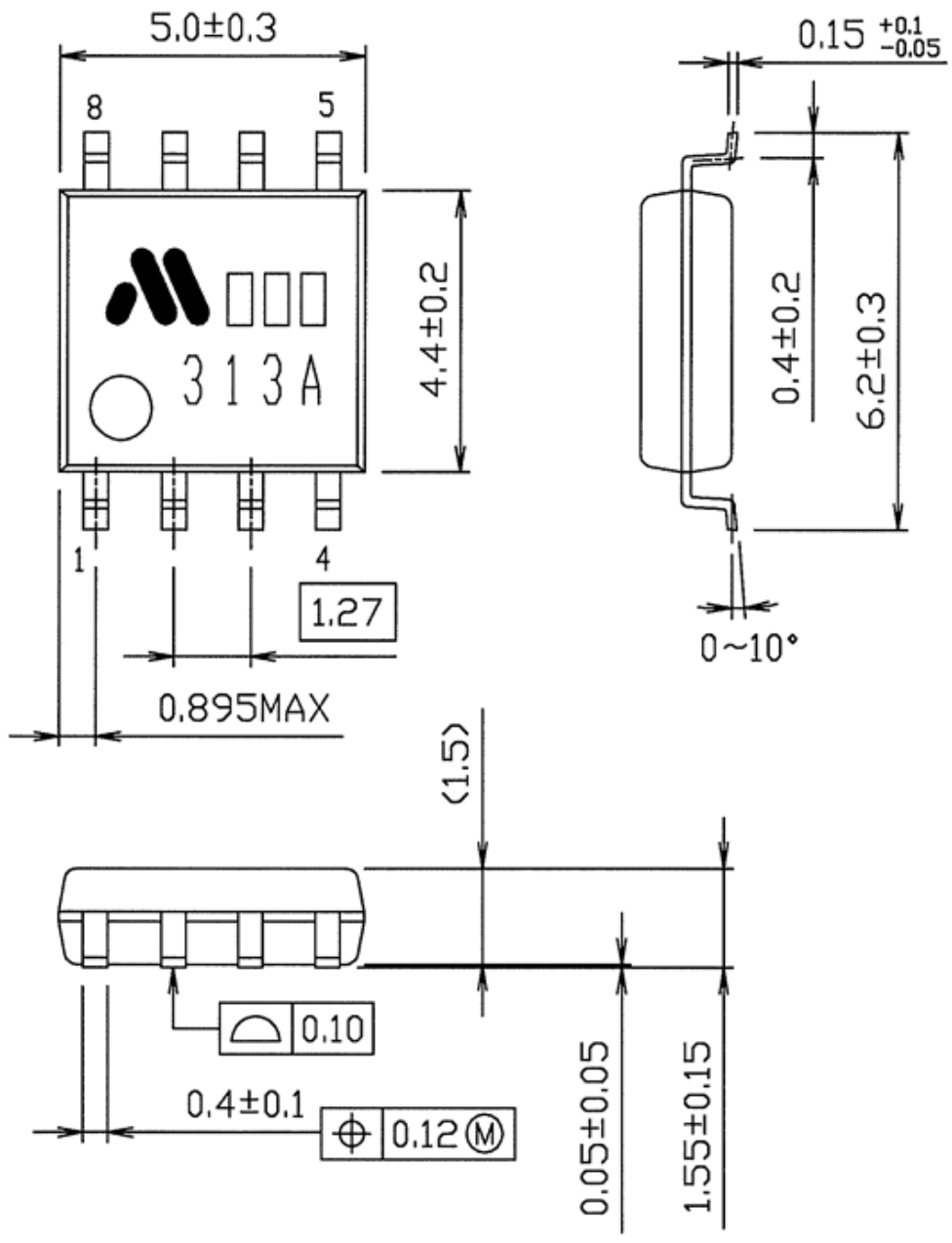

Marking Contents

