MITSUMI

The PWM control IC for AC-DC converter

MM3663 Series

Overview

The MM3663 is the current mode PWM controller IC, designed for flyback converter. This IC can substantially reduce standby power by the start up circuit using the 500V high breakdown process, burst mode operating in low load, and optimization of supply current. Frequency reduction function in load of middle range and minimum frequency limit function prevent chattering noise in low load, and improve average efficiency. Select function of maximum frequency (66kHz or 100kHz) and adjustment function of FB pin voltage for oscillation stop which is innovation expand flexibility of the power supply design. Others, frequency jittering function, X capacitor discharge function make the measures of EMI easy. The MM3663 which has various protection functions can assist safety design of power supply.

Features

- Start up circuit by 500V high breakdown process reduce start up circuit loss.
- Current mode PWM controller (select function of maximum oscillating frequency, 66kHz or 100kHz)
- Frequency reduction function in load of middle range improve avearge efficiency.
- Low voltage of UVLO and low supply current in oscillation stop reduce standby power more.
- Noise diffusion, downsize filter by frequency jitter function in all range.
- X capacitor discharge function which don't increase standby power can make the measures of EMI easy.
- A balance of standby power and output ripple in burst mode can be adjusted by adjustment function of FB pin voltage for oscillation stop. (GATE output stop voltage)
- Input voltage correction function of load current in over current protection realize flat correction characteristics.
- Substantial protection functions included, current detect pin open detection, auxiliary winding short detection, and so on.
- The CB certification in the X capacitor discharge function is acquired.
  【IEC 60065 (ed.8)、IEC 60950-1 (ed.2)、IEC 62368-1 (ed.2)】

Main specifications

- HV Pin Voltage : 500V
- Operating Supply Voltage : 10V to 24V
- Supply Current : Typ. 0.7mA　0.3mA at burst mode
- Maximum Frequency : Typ. 66kHz or 100kHz

Packages

- SOP-8J

Application

- Flat panel TV
- DVD Player, BD Player, BD Recorder
- Printer, Copying Machine, FAX
- AC/DC Adapters
- Various Power Supplies

MinebeaMitsumi
Passion to Create Value through Difference

Mitsumi Search
https://mtm-sec.mitsumi.co.jp/web/ic/

Mitsumi Electric CO.,LTD.
Semiconductor Business Division
Strategy Engineering Department
tel:+81-46-230-3470

■ All brand names, logos, product names, trade names and service names described here are trademarks or registered trademarks of their respective companies or organizations.
■ Any products mentioned in this leaflet are subject to any modification in their appearance and others for improvements without prior notification.
■ The details listed here are not a guarantee of the individual products at the time of ordering. When using the products, you will be asked to check their specifications.

Feb, 2022 Rev.0

Model Name

M M 3 6 6 3 X F F E

Series name (A) (B) (C) (D)

(A) Function Type	
A	Latch off in Over Load Protection with X Capacitor Discharge
B	Auto restart in Over Load Protection with X Capacitor Discharge
C	Latch off in Over Load Protection
D	Auto restart in Over Load Protection

(C) Packing Specifications	
F	F Housing

※ (B) Package → SOP-8J

※ (D) Emboss Tape

Block Diagram

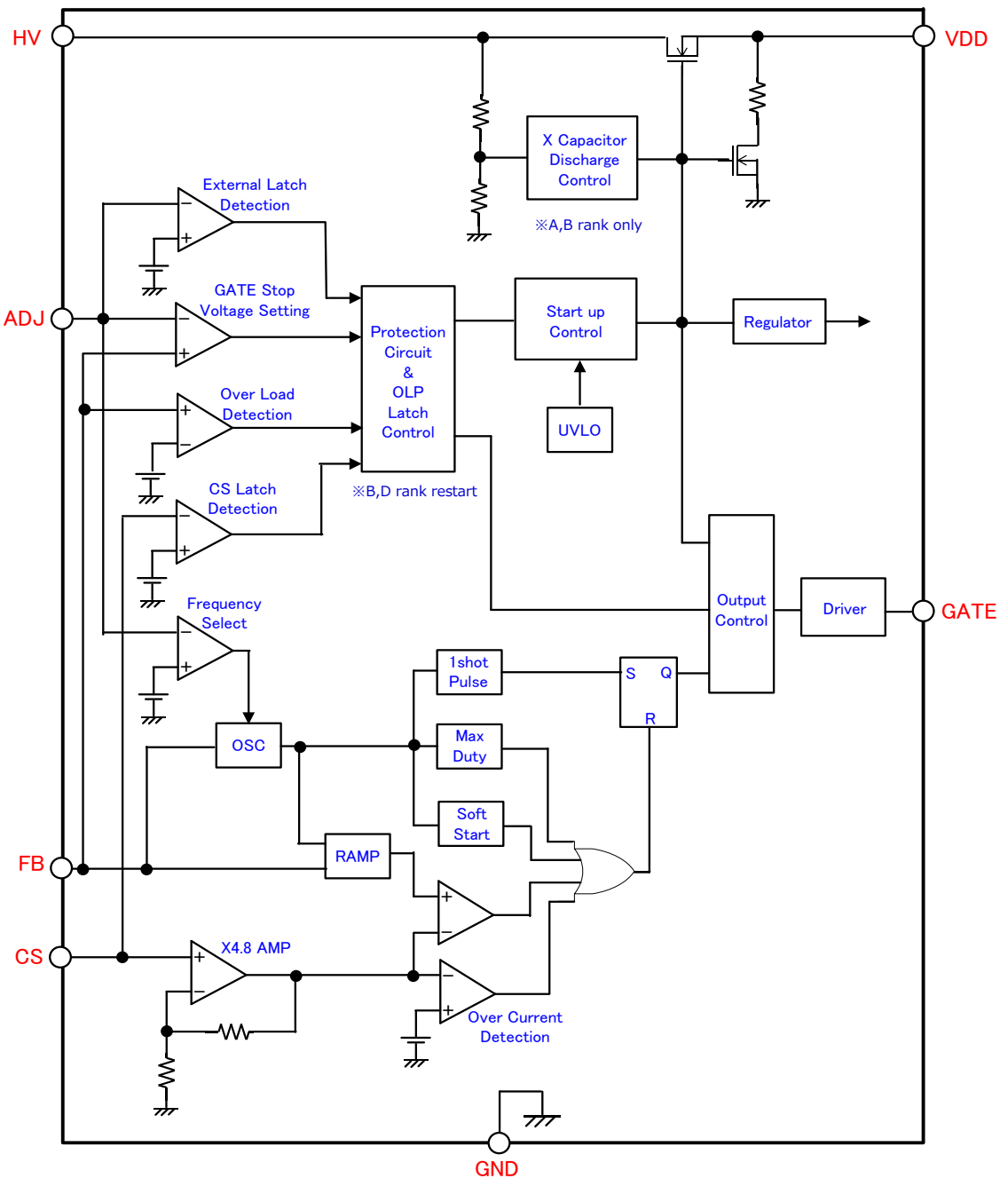

Pin Configuration

- SOP-8J

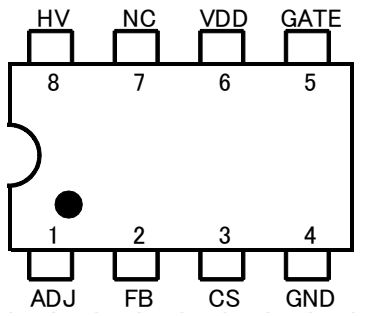

Pin No.	Symbol	Function
1	ADJ	GATE output stop voltage setting, external latch input, and oscillator frequency select pin
2	FB	Feedback input pin
3	CS	Current sense pin
4	GND	Ground pin
5	GATE	Output pin
6	VDD	Power supply input pin
7	NC	No connection
8	HV	High voltage startup pin

Absolute Maximum Ratings

(Ta=25℃, unless otherwise specified)

Item	Symbol	Min.	Max.	Unit
Storage temperature	Tstg	-40	150	℃
Operating Temperature	Topr	-30	125	℃
VDD Pin Voltage	VDD	-0.3	30	V
ADJ Pin Voltage	VADJ	-0.3	5	V
CS Pin Voltage	VCS	-0.3	5	V
FB Pin Voltage	VFB	-0.3	5	V
GATE Pin Voltage	VGATE	-0.3	VDD	V
Gate Pin Peak Current	IOH	-	-0.5	A
	IOL	-	1	A
HV Pin Voltage	VHV	-0.3	500	V
Power Dissipation	Pd	-	300	mW

Recommended Operating Conditions

(Ta=25℃, unless otherwise specified)

Item	Symbol	Min.	Max.	Unit
Operating Supply Voltage	Vop	10	24	V
HV Pin Input Voltage	Vhvop	100	450	V
HV Pin Connection Resistance	Rvh	2.2	22	kΩ
X Capacitor Capacitance	Cx	0.1	6	uF
VDD Pin Capacitance	Cvdd	10	100	uF
Operating Temperature	Top	-30	105	℃

Electrical Characteristics

(Ta=25℃ , VDD=15V, FB=2V, CS=0V, ADJ=0.8V unless otherwise specified)

Parameter	Symbol	Conditions	Min.	Typ.	Max.	Unit	*1
High Voltage Input Section (HV Pin)							
HV Input Current 1	Ihv1	HV=450V,VDD=23V A,B rank only	10	16	27	μA	A
HV Input Current 2	Ihv2	HV=120V,VDD=5V	7	10.5	13	mA	A
AC Interception Detect Voltage Level（※）	Vac	HV=120V peak A,B rank only	65	75	85	%	A
AC Interception Detect Time	Tac	HV=120V,VDD=23V A,B rank only	20	30	40	ms	A
X Capacitor Discharge Current （※）	Ixc	HV=120V,VDD=15V A,B rank only	1.4	-	-	mA	A
Power Supply Input Section (VDD Pin)							
Source Current in Startup	Istr	HV=120V,VDD=5V	-12.8	-10.3	-6.8	mA	A
Source Current in Latch	Ilat	HV=120V,VDD=10V	-12	-9.5	-6	mA	A
Operating Start Voltage	Vddon	VDD=15 → 23V	19.5	21	22.5	V	B
Operating Stop Voltage	Vddoff	VDD=15 → 5V	6	6.5	7	V	B
Upper Level Voltage in Latch （※）	Vddlat1	Latch mode	-	-	15	V	A
Lower Level Voltage in Latch （※）	Vddlat2	Latch mode	10.5	-	-	V	A
Supply Current1	Idd1	CL=Open	0.55	0.7	0.85	mA	B
Supply Current2	Idd2	FB=0V	0.2	0.3	0.4	mA	B
Supply Current in Latch	Iddlat	Latch mode, FB=5V	0.15	0.25	0.35	mA	A
VDD Over Voltage Detection	Vddovp	VDD=15 → 29.5V	25.3	27.3	29.3	V	B
VDD Over Voltage Detection Delay Time	Tvddovp	VDD=15 → 29.5V	25	50	190	μs	B
Various Function Settings Section (ADJ Pin)							
ADJ Voltage for 66kHz	Vadj1		-	-	1.21	V	B
ADJ Voltage for 100kHz	Vadj2		1.39	-	-	V	B
External Latch Stop Level	Vext	ADJ=0.5 → 0.3V	0.35	-	-	V	B
ADJ Source Current	Iadj		-4.3	-4	-3.7	μA	C

※ guaranteed by design

*1 The test circuit symbols.

Electrical Characteristics

(Ta=25℃ , VDD=15V, FB=2V, CS=0V, ADJ=0.8V unless otherwise specified)

Parameter	Symbol	Conditions	Min.	Typ.	Max.	Unit	*1
Feedback Section (FB Pin)							
Maximum Duty Cycle (※)	Dmax	f=Fmax	75	84	91	%	B
FB Source Current	Ifb	FB=0V	-90	-58	-40	μA	D
Gate Stop Voltage 1	Voff1	Fmax=66kHz,ADJ=0.8V	0.72	0.8	0.88	V	B
Gate Stop Voltage 2	Voff2	Fmax=100kHz,ADJ=2.24V	0.72	0.8	0.88	V	B
Gate Stop Voltage Hysteresis Range (※)	Voffhys	Fmax=66kHz,ADJ=0.8V	-	60	-	mV	B
Over Load Detection Voltage	Vfbolp	VDD=10V,FB=3.4→4.6V	3.5	4	4.5	V	B
Over Load Timer (※)	Tfbolp	FB=3.4→4.6V	190	250	310	ms	B
Restart Timer (※)	Trestart	FB=3.4→4.6V B,D rank only	1.5	2	2.5	s	B
Current Detection Section (CS Pin)							
Voltage Gain (※)	Avcs		-	4.8	-	V/V	E
Over Current Detection Voltage1 (※)	Vthcs1	Duty=20%	0.432	0.455	0.478	V	E
Over Current Detection Voltage2 (※)	Vthcs2	Duty=40%	0.508	0.535	0.562	V	E
Minimum On Time1	Tmo1	CS=1V	410	610	810	ns	E
Minimum On Time2	Tmo2	Soft Start Range Over Load Range	220	320	420	ns	E
GATE Output Delay Time (※)	Toff		-	200	-	ns	E
CS Source Current (※)	Ics		-	-0.8	-	μA	F
CS Latch Stop Detection Voltage	Vthcslat	CS=2→3V	2.25	2.5	2.75	V	E
Output Section (GATE Pin)							
L Output Voltage	Voutl	Iol=100mA	0.5	1.2	2.2	V	G
H Output Voltage	Vouth	Ioh=-100mA	11	12.5	14	V	H
Rise Time	Trise	CL=1nF	30	60	100	ns	I
Fall Time	Tfall	CL=1nF	20	40	70	ns	I
Soft Start Section							
Soft Start Time 1 (※)	Tss1	Fmax=66kHz	-	4.8	-	ms	B
Soft Start Time 2 (※)	Tss2	Fmax=100kHz	-	6.4	-	ms	B

※ guaranteed by design

*1 The test circuit symbols.

Electrical Characteristics

(Ta=25℃ , VDD=15V, FB=2V, CS=0V, ADJ=0.8V unless otherwise specified)

Parameter	Symbol	Conditions	Min.	Typ.	Max.	Unit	*1
Oscillator Section							
Maximum Frequency1	Fmax1		60	66	72	kHz	B
Maximum Frequency2	Fmax2	ADJ=2.24V	90	100	110	kHz	B
Frequency Change Ratio due to the power supply voltage	Fcrv	VDD = 10 ～ 24 V	-2	-	2	%	B
Frequency Change Ratio due to temperature (※)	Fcrt	Ta = -30 ～ 125 ℃	-5	-	5	%	B
Jitta Change Ratio 1	Fjcr1	Fmax=66kHz	±3	±5.5	±8	%	B
Jitta Change Ratio 2	Fjcr2	Fmax=100kHz	±5.5	±8.5	±11.5	%	B
FB Pin Threshold Voltage at Frequency Decrease Biginning (※)	Vfbd		1.54	1.6	1.66	V	B
FB Pin Threshold Voltage at Frequency Increase Biginning (※)	Vfbi		1.44	1.5	1.56	V	B
Minimum Frequency1	Fmin1	FB=1.2V	20	22	24	kHz	B
Minimum Frequency2	Fmin2	FB=1.2V, ADJ=2.24V	19	21	23	kHz	B

※ guaranteed by design

*1 The test circuit symbols.

Test Circuit

TEST CIRCUIT A

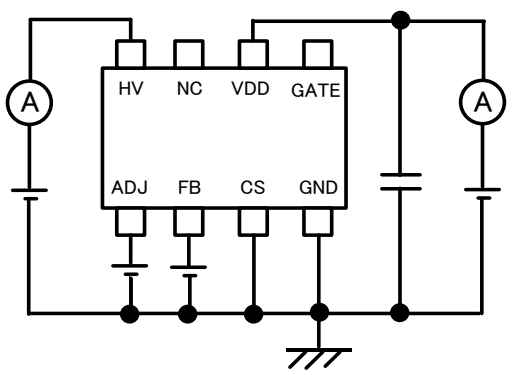

TEST CIRCUIT B

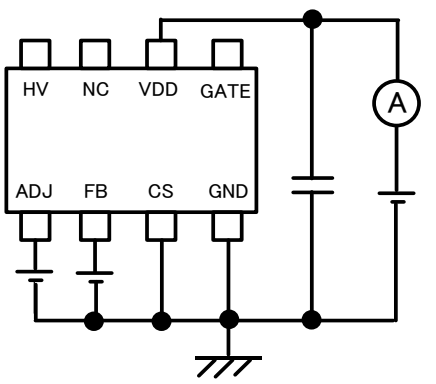

TEST CIRCUIT C

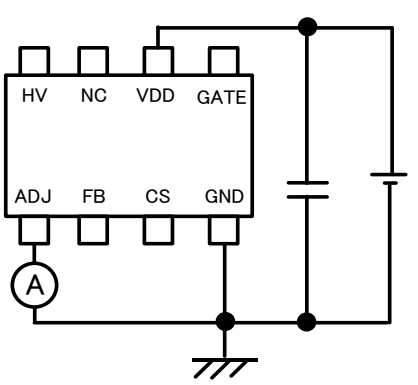

TEST CIRCUIT D

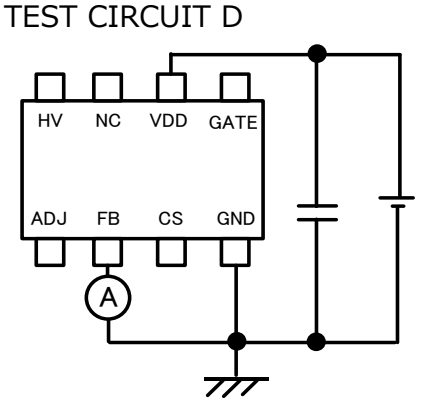

TEST CIRCUIT E

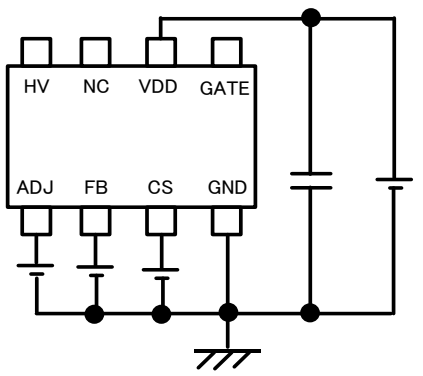

TEST CIRCUIT F

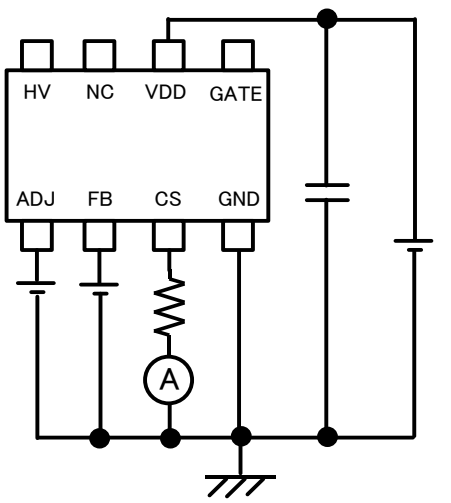

Test Circuit

TEST CIRCUIT G

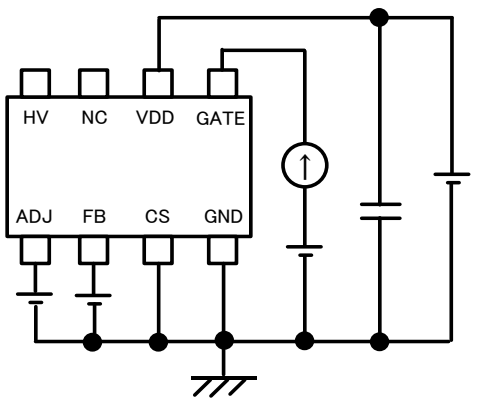

TEST CIRCUIT H

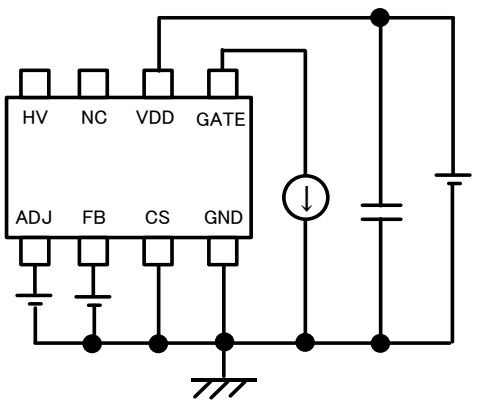

TEST CIRCUIT I

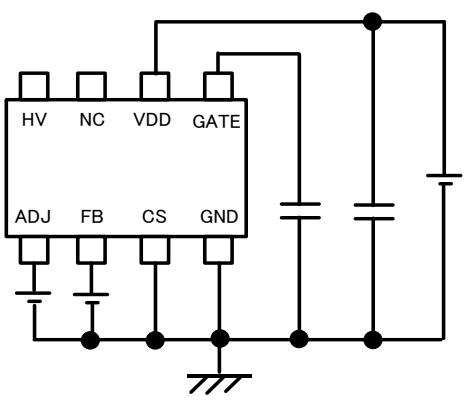

Timing Chart

Current mode control

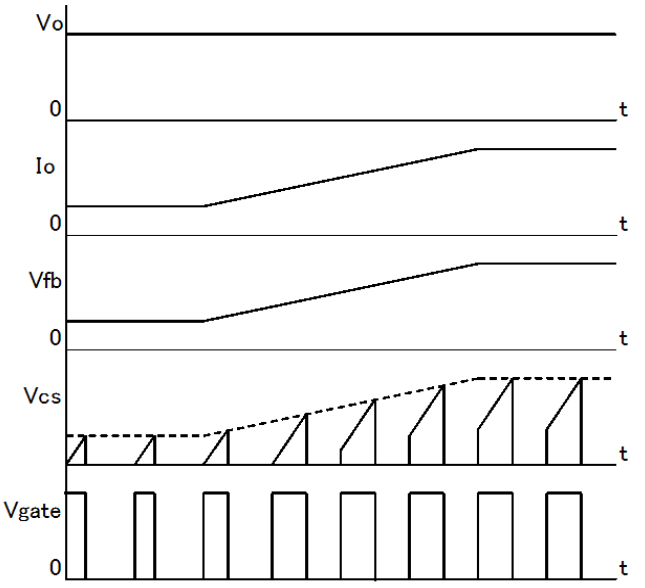

VDD start up characteristics

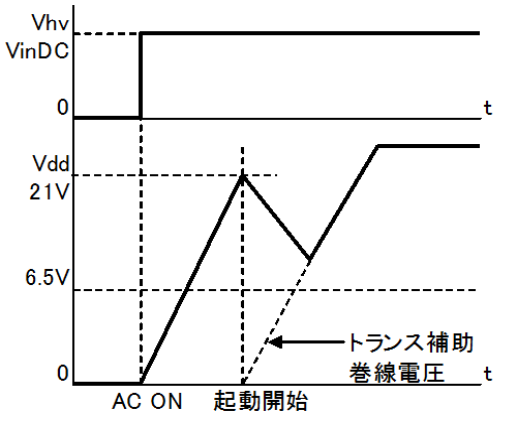

Frequency jitter function

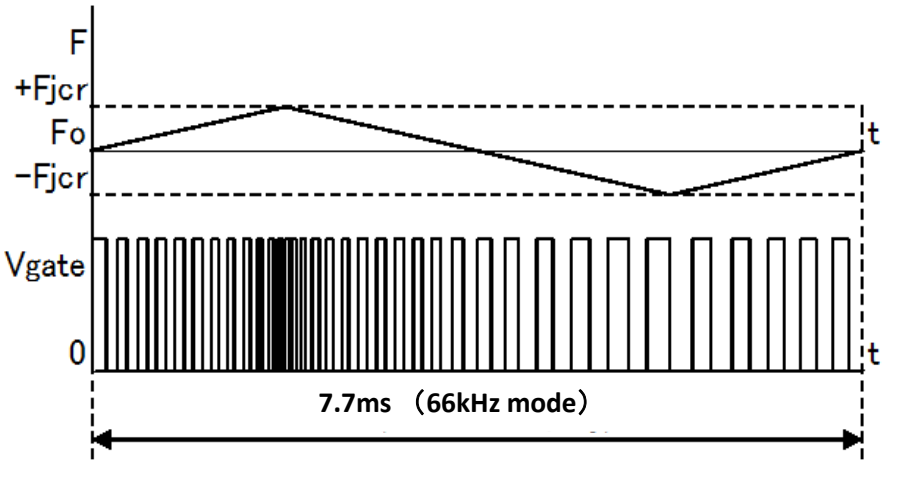

Timing Chart

Burst mode operation

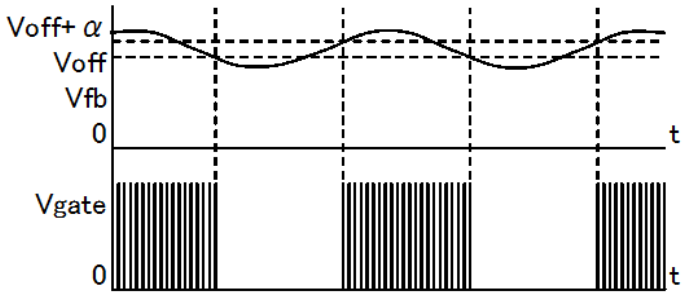

Slope compensation

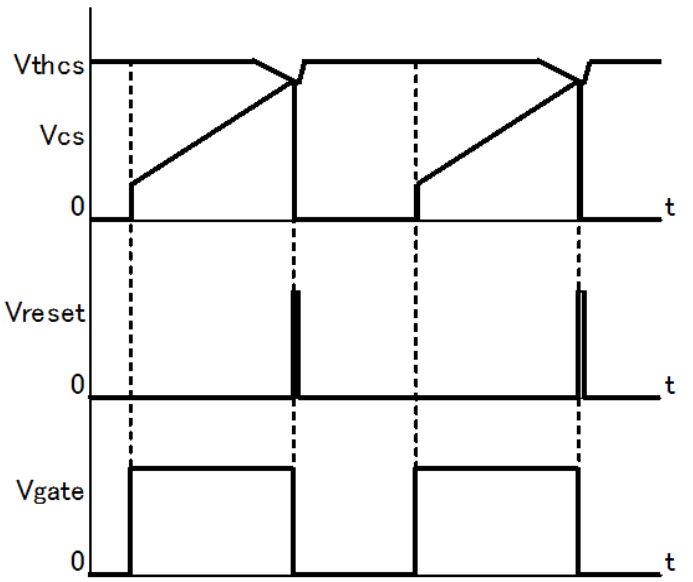

Soft start

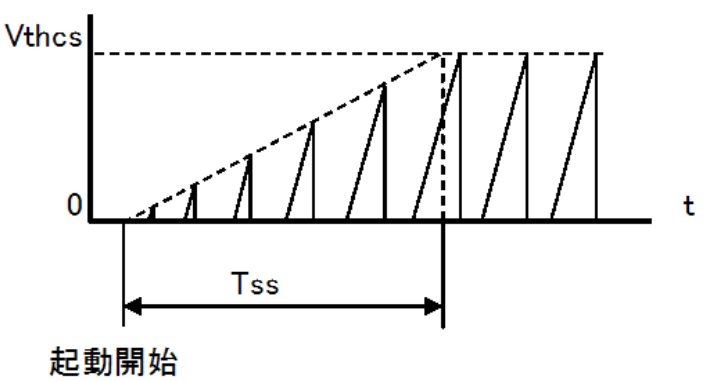

Timing Chart

Over current protection

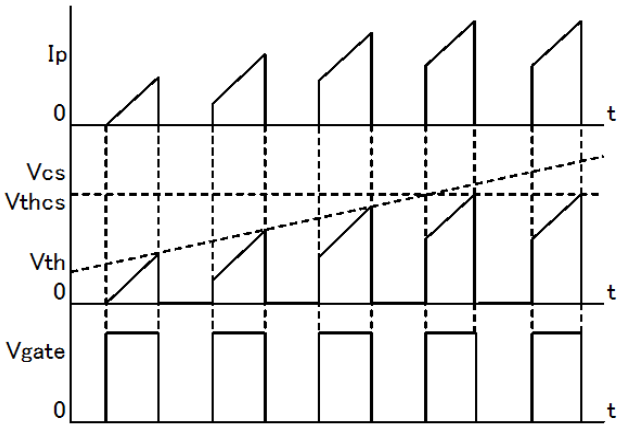

Over load protection

・Latch Type

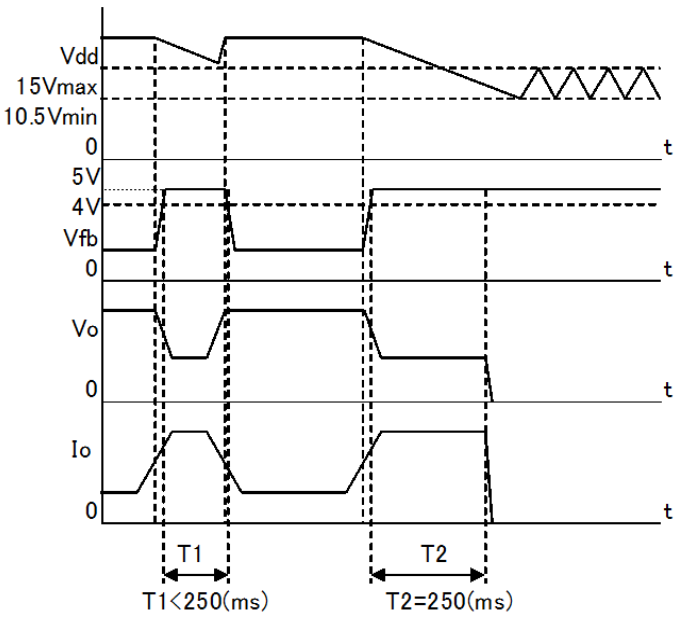

・Auto restart Type

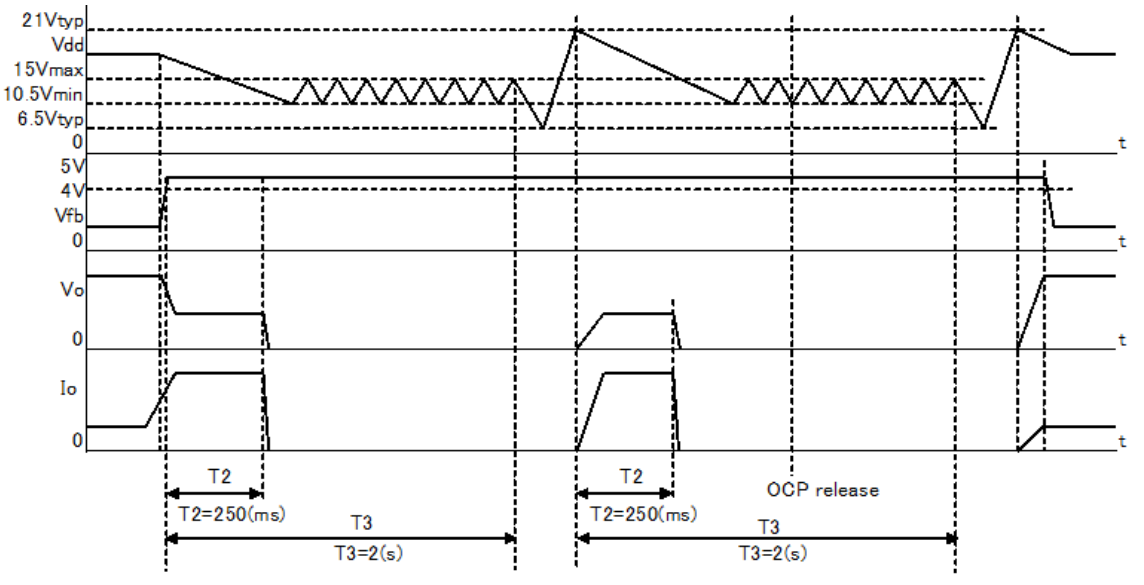

Timing Chart

Over voltage protection

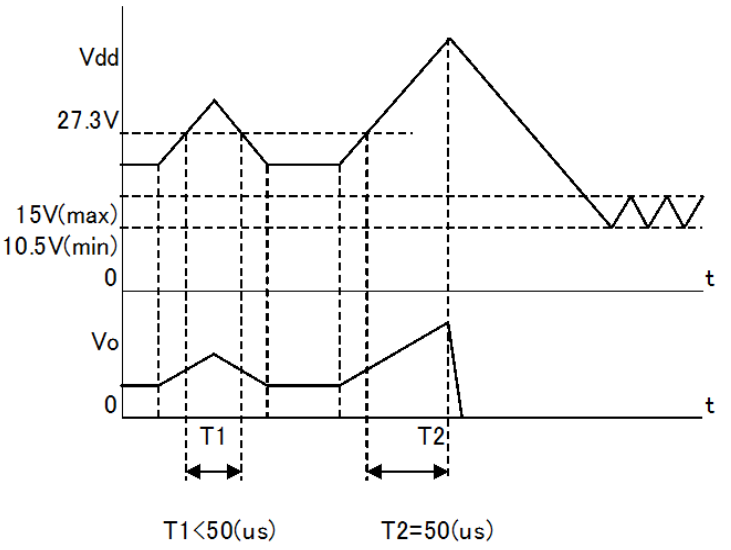

Auxiliary winding short protection

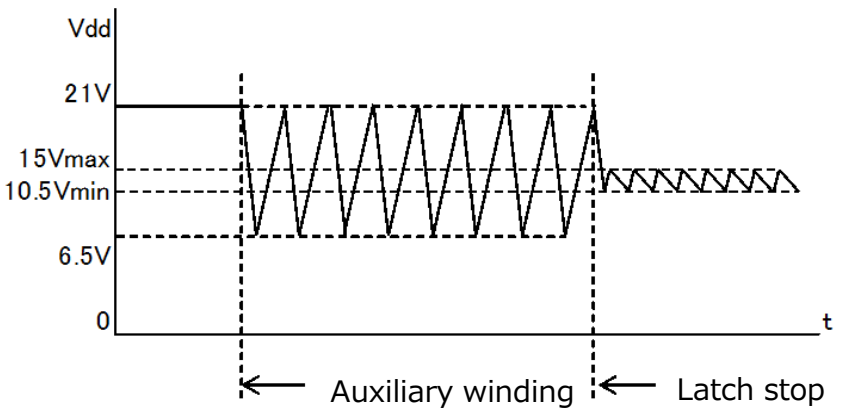

Typical Application Circuit

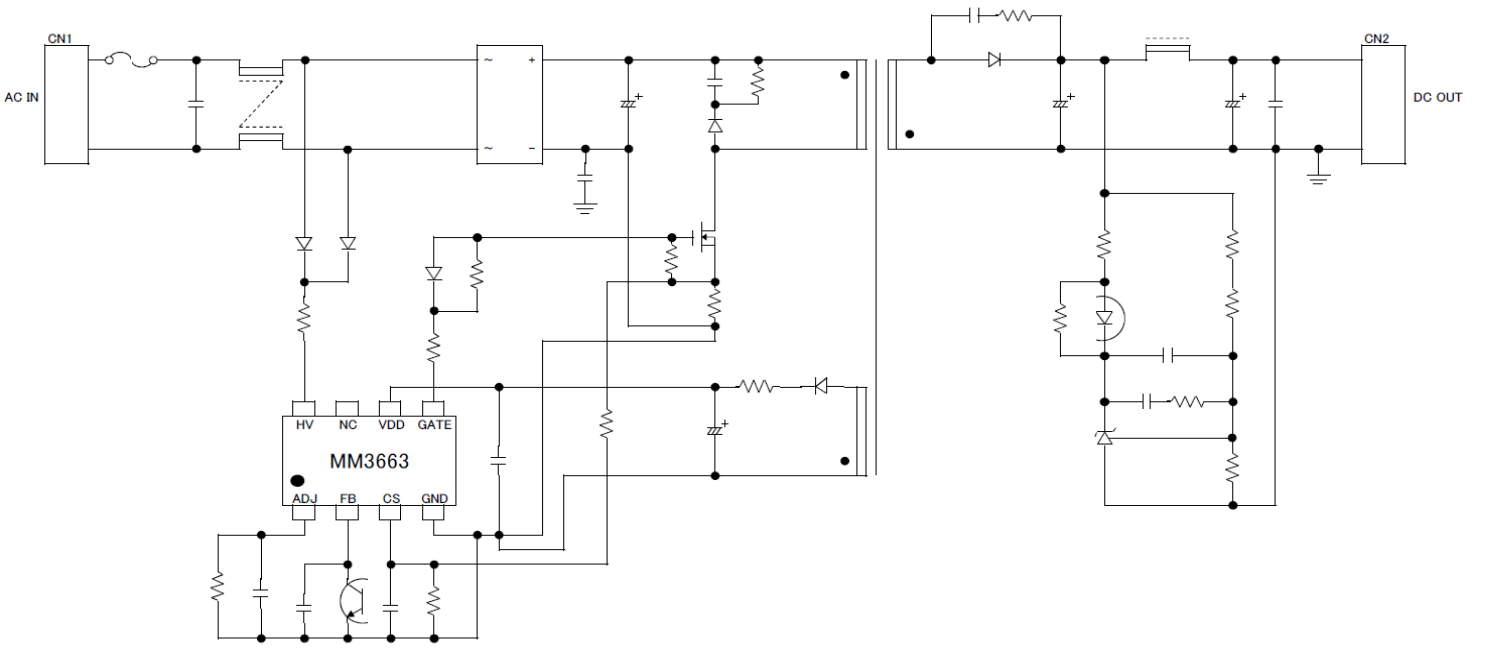

Typical Performance Characteristics

(Ta=25℃, unless otherwise specified)

Maximum Frequency 1 vs. VDD Pin Voltage

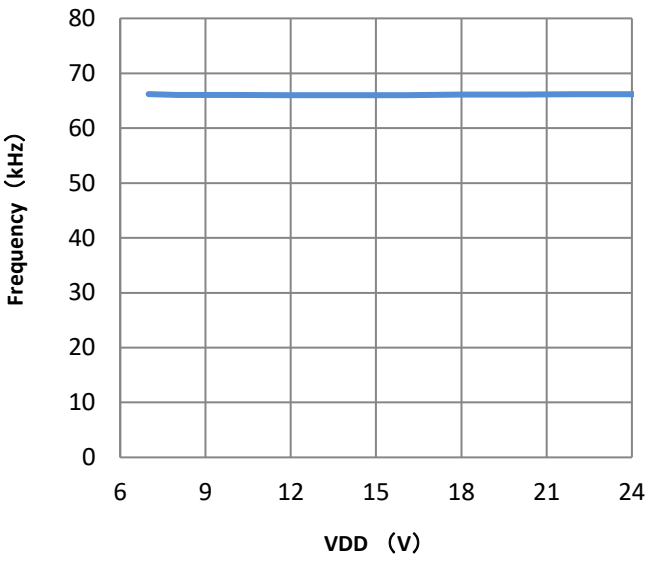

Maximum Frequency 2 vs. VDD Pin Voltage

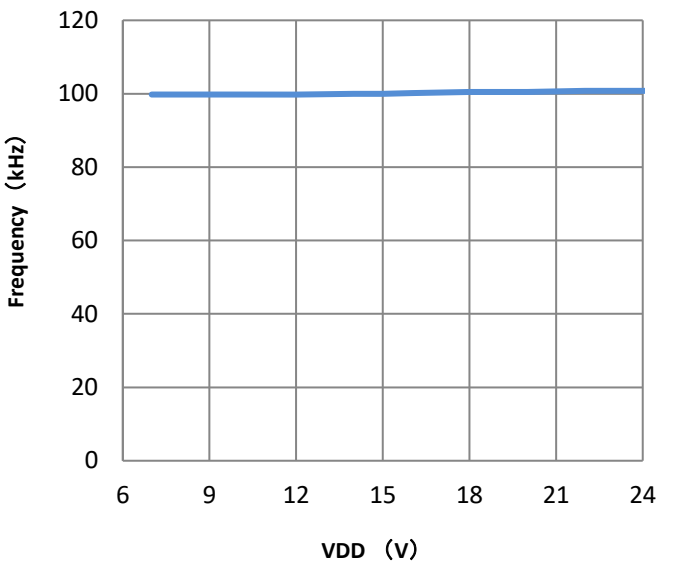

Supply Current 1 vs. VDD Pin Voltage

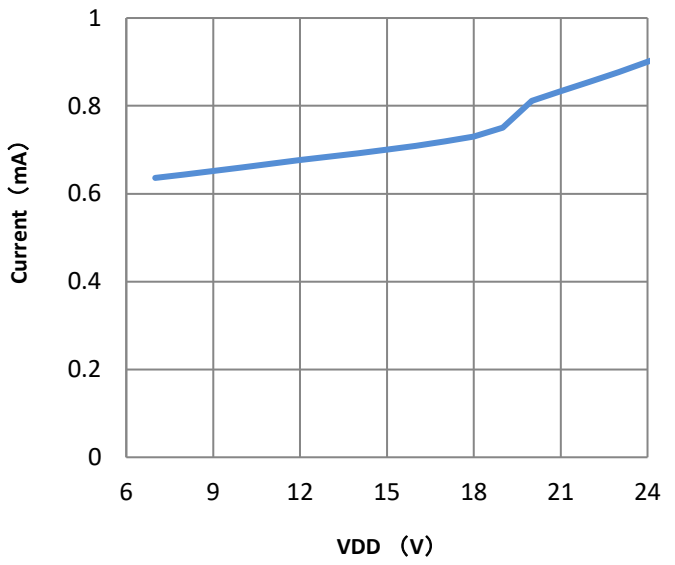

Supply Current 2 vs. VDD Pin Voltage

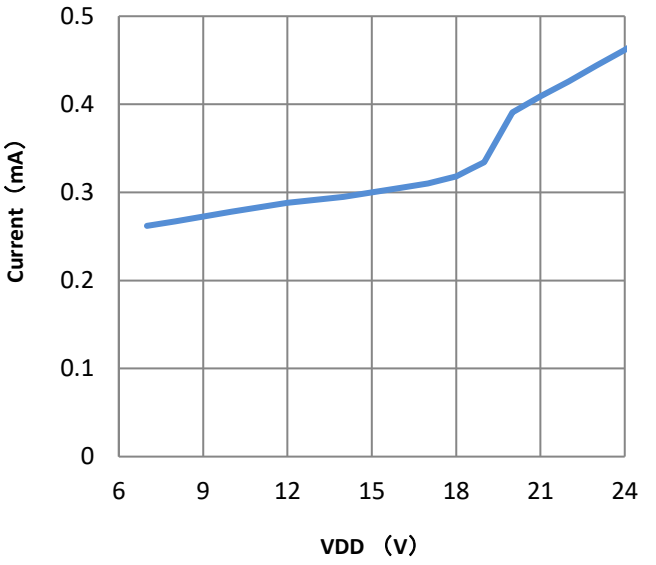

Supply Current in Latch vs. VDD Pin Voltage

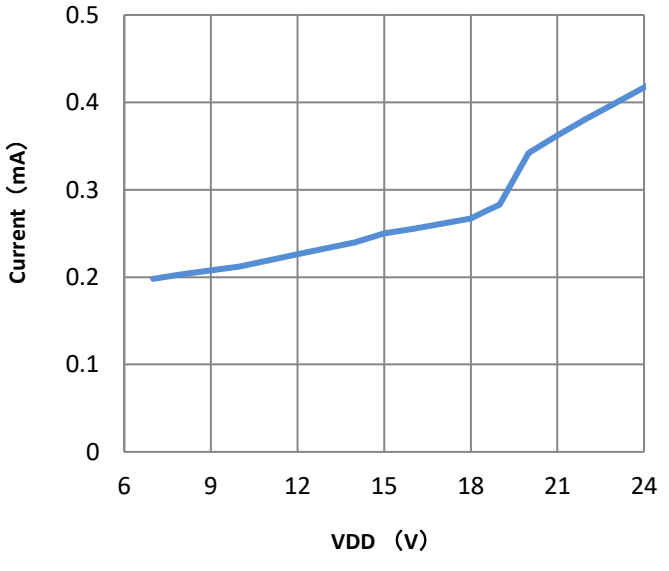

Source Current in Startup vs. VDD Pin Voltage

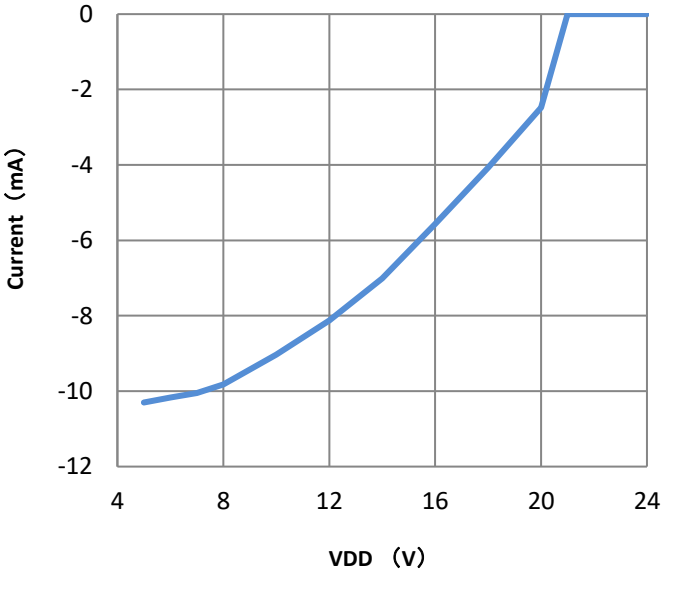

Typical Performance Characteristics

(Ta=25℃, unless otherwise specified)

ADJ Source Current vs. VDD Pin Voltage

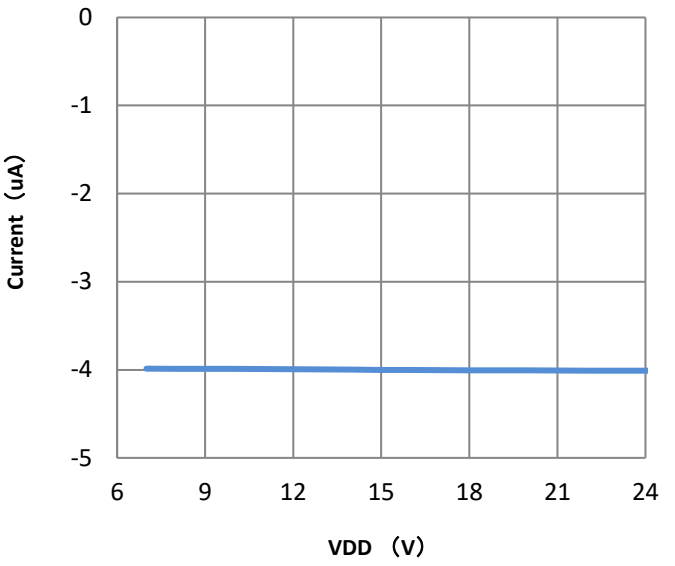

FB Source Current vs. VDD Pin Voltage

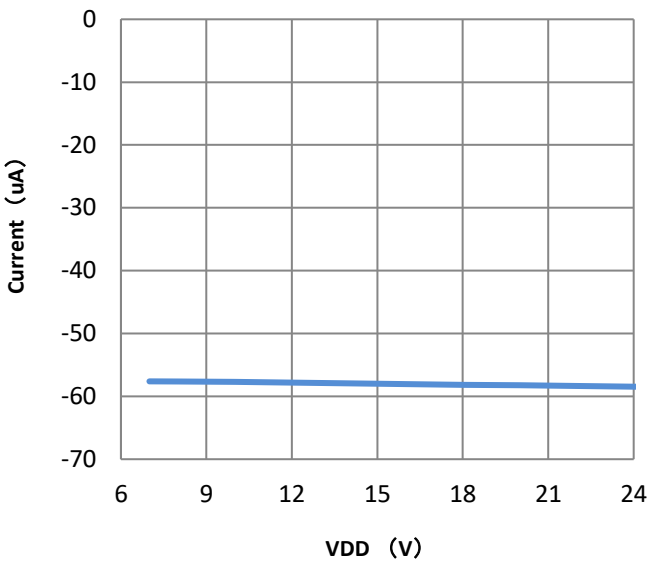

HV Input Current 1 vs. HV Pin Voltage

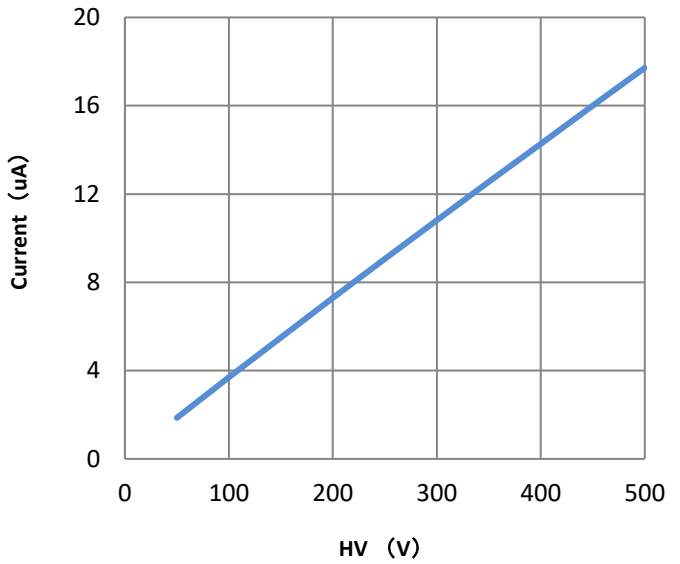

HV Input Current 2 vs. HV Pin Voltage

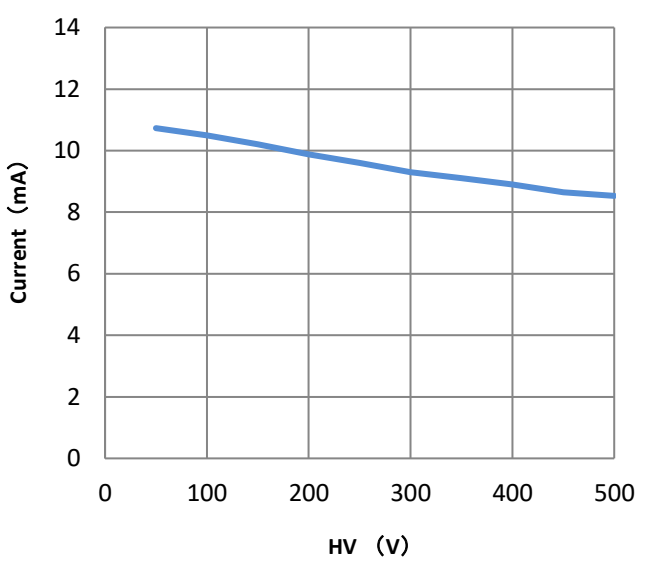

Frequency vs. FB Pin Voltage

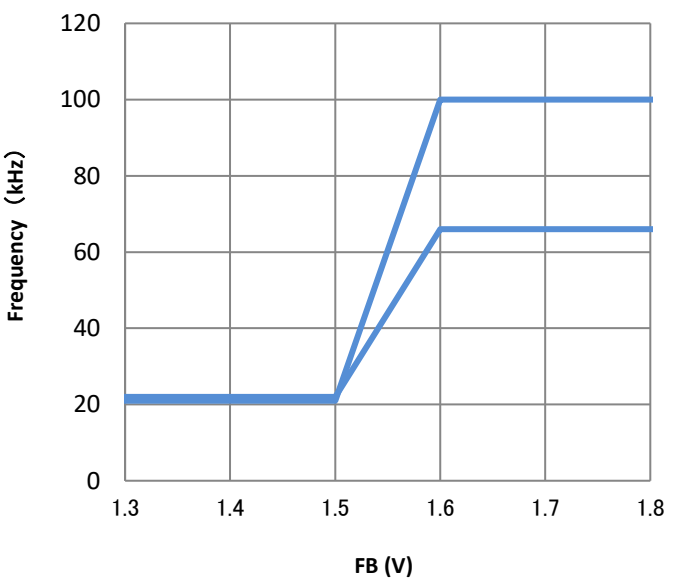

Over Current Detection Voltage vs. ON Duty

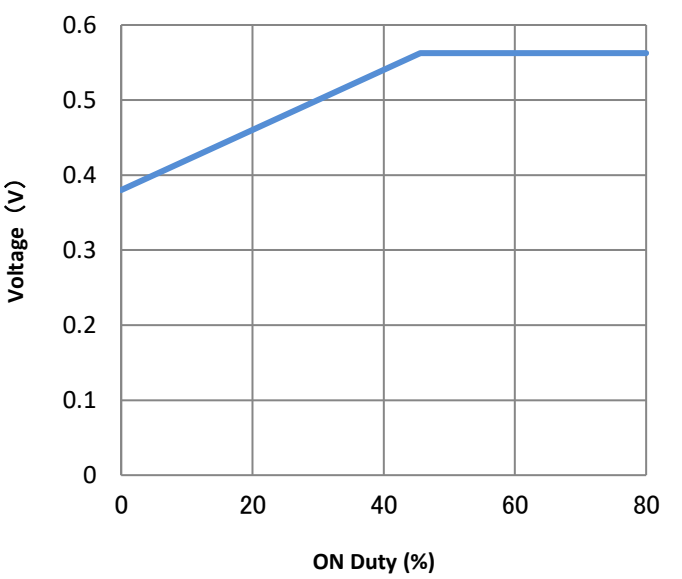

Typical Performance Characteristics

HV Input Current 1 vs. Temperature

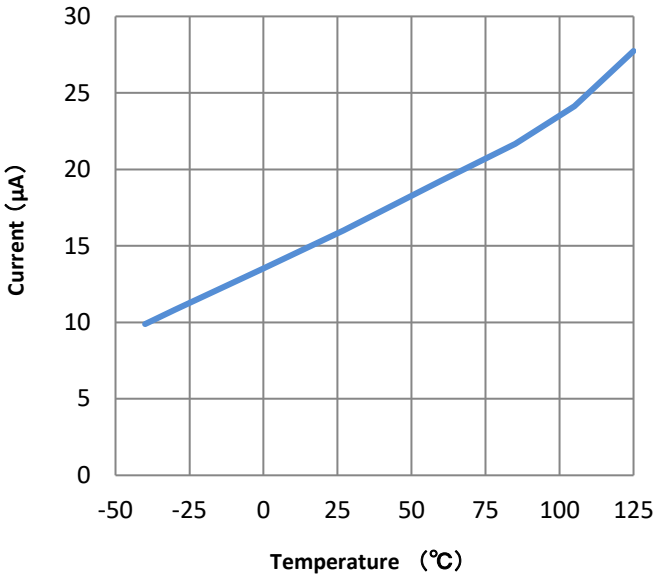

HV Input Current 2 vs. Temperature

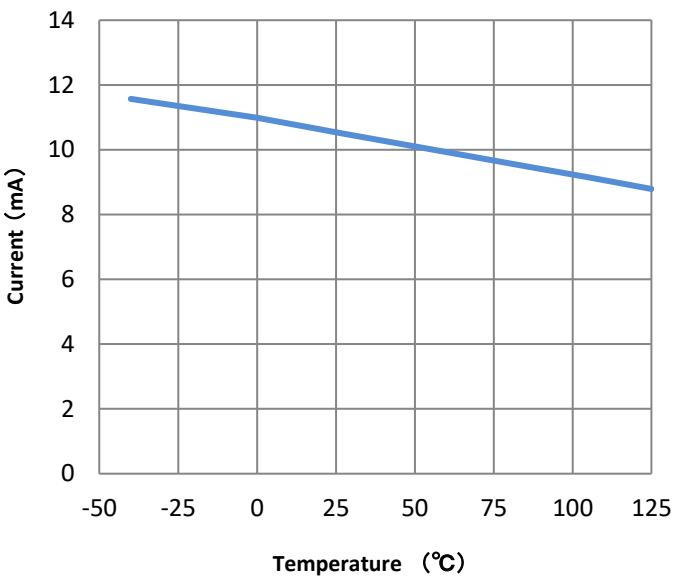

AC Interception Detect Voltage Level vs. Temperature

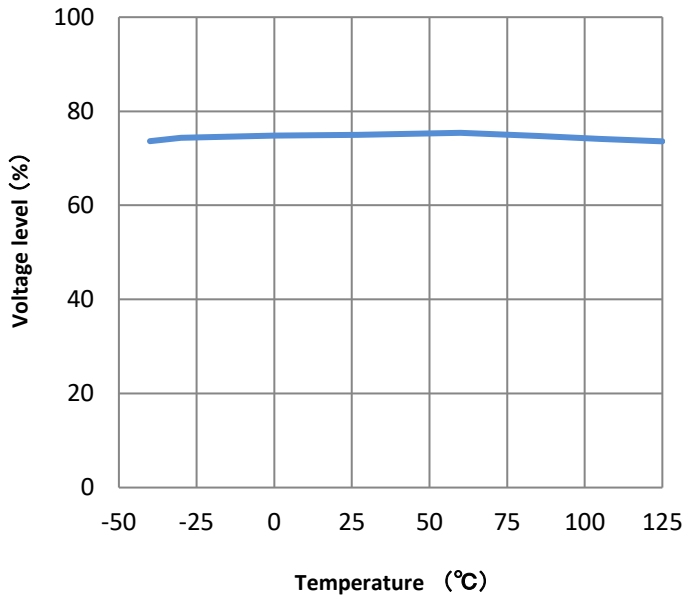

AC Interception Detect Time vs. Temperature

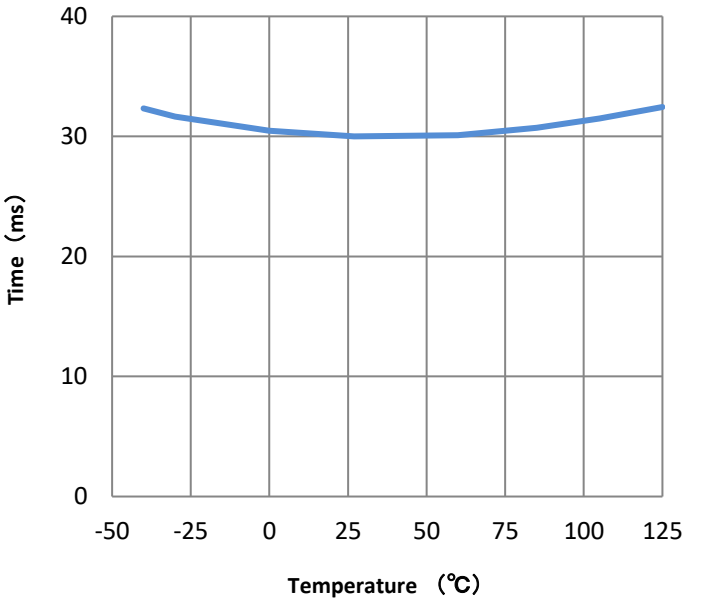

X Capacitor Discharge Current vs. Temperature

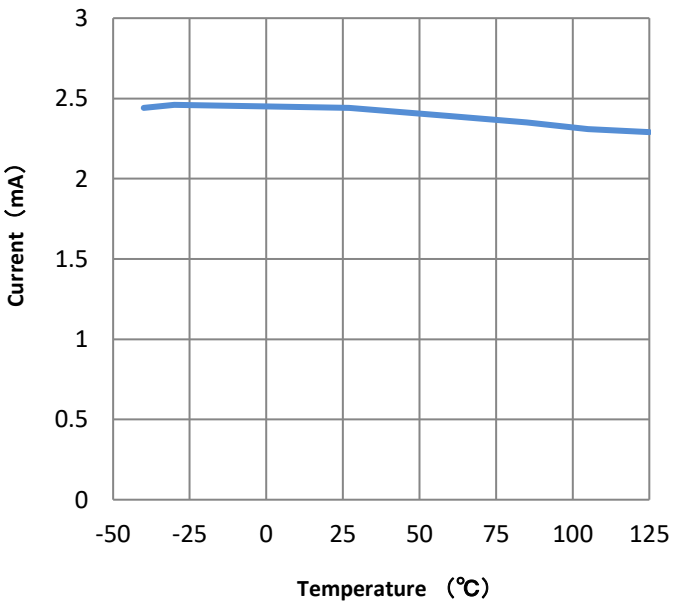

Source Current in Startup vs. Temperature

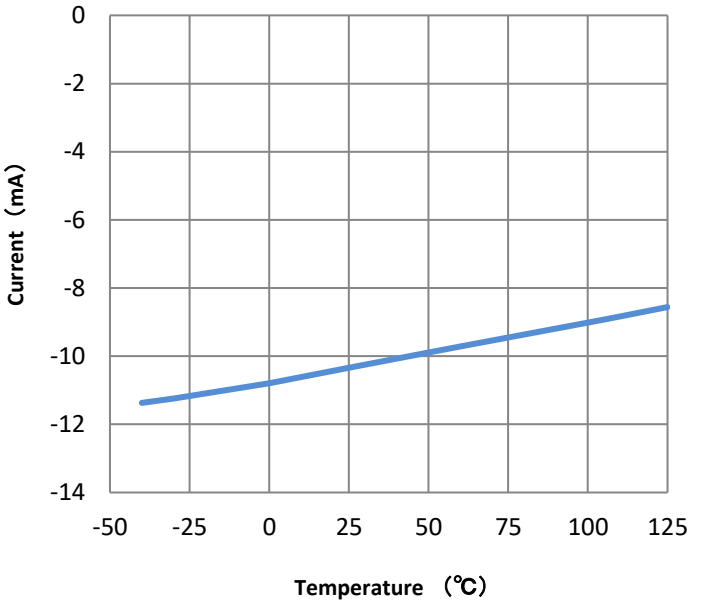

Typical Performance Characteristics

Source Current in Latch vs. Temperature

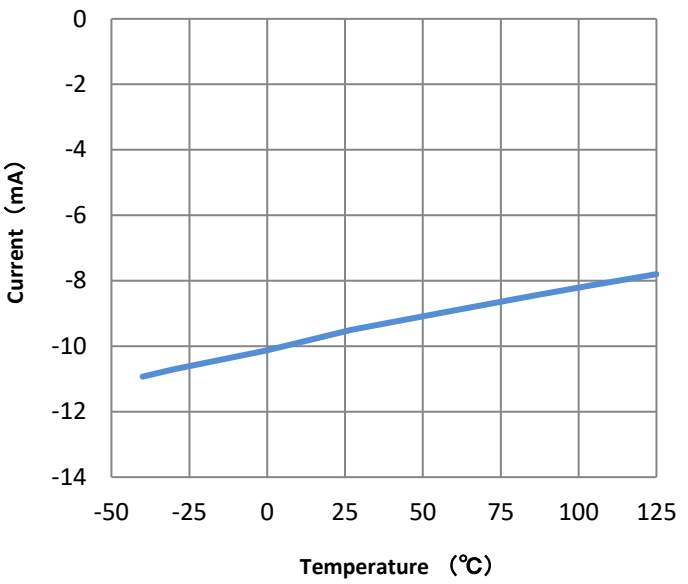

Operating Start Voltage vs. Temperature

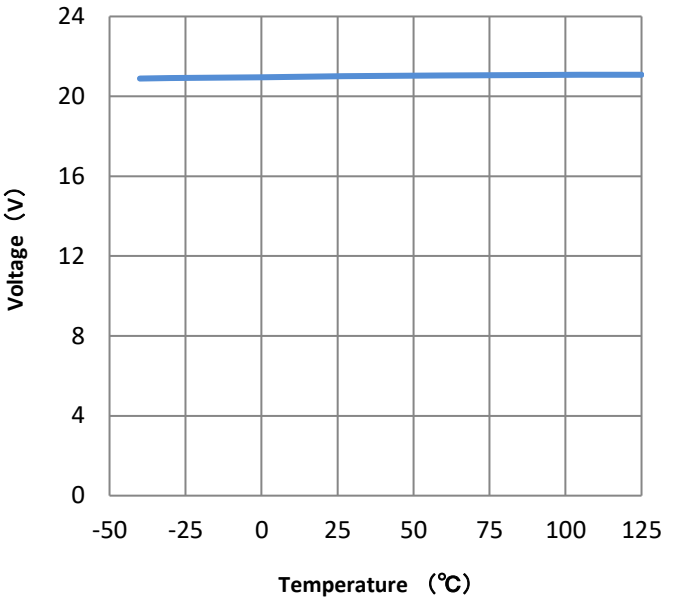

Operating Stop Voltage vs. Temperature

Upper Level Voltage in Latch vs. Temperature

Lower Level Voltage in Latch vs. Temperature

Supply Current 1 vs. Temperature

Typical Performance Characteristics

Supply Current 2 vs. Temperature

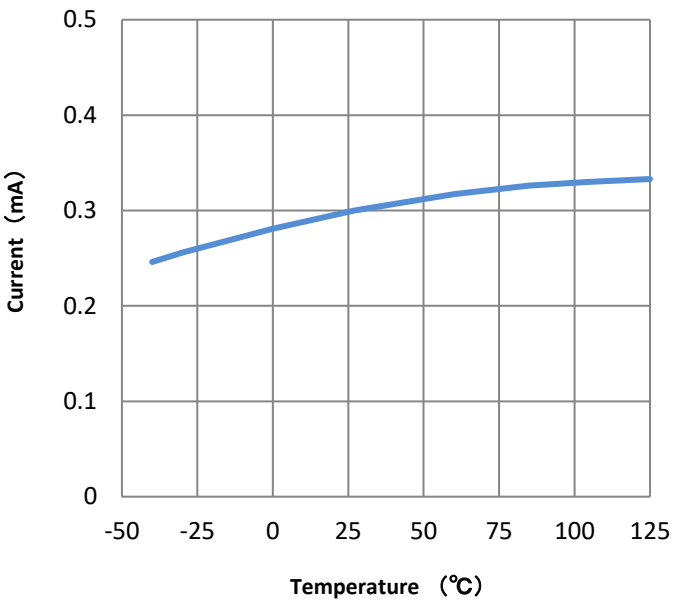

Supply Current in Latch vs. Temperature

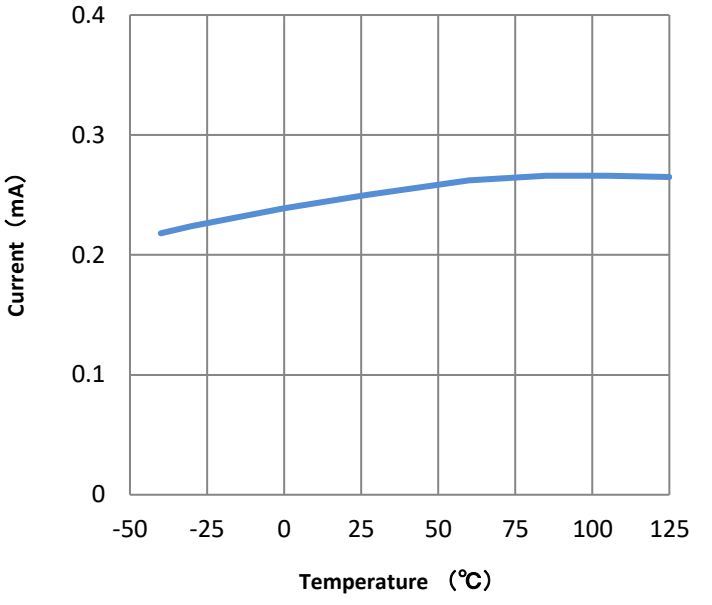

VDD Over Voltage Detection vs. Temperature

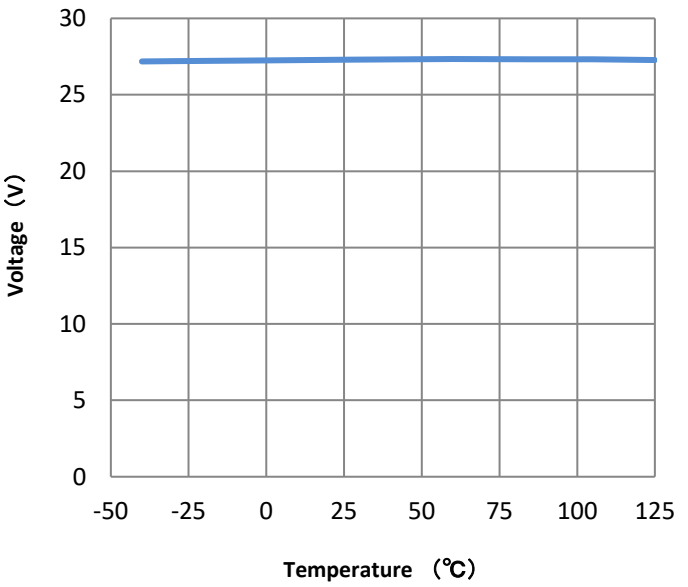

VDD Over Voltage Detection Delay Time vs. Temperature

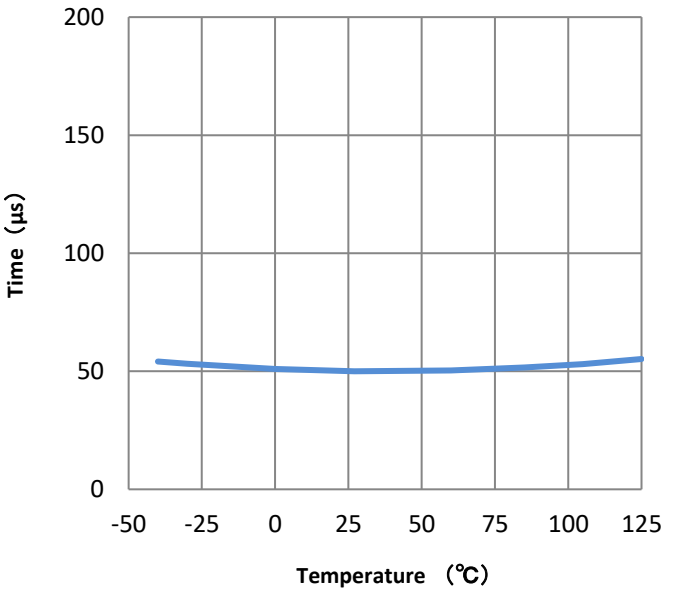

Frequency Switching Voltage vs. Temperature

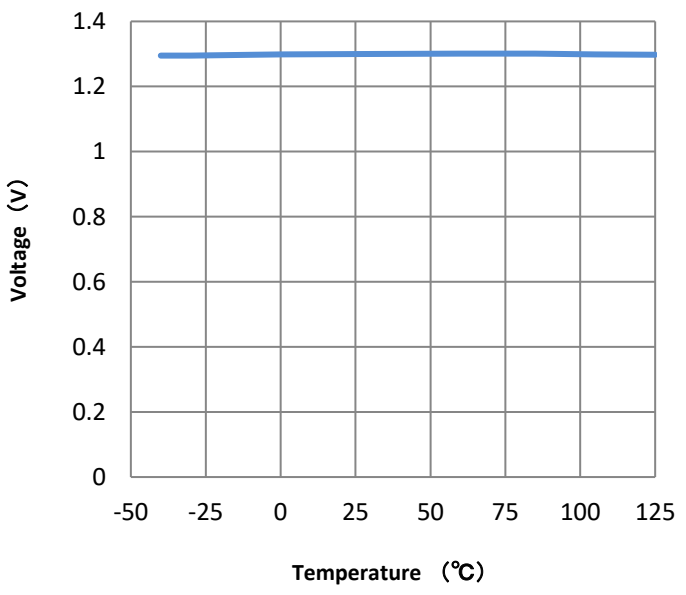

External Latch Stop Lebel vs. Temperature

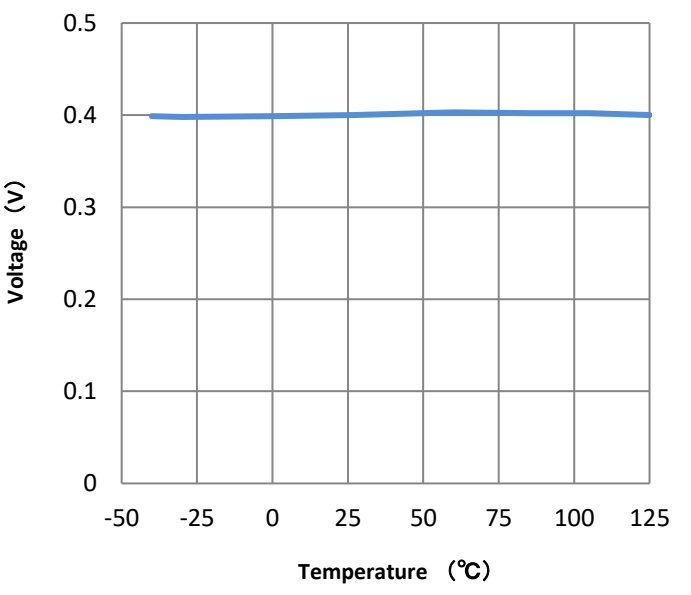

Typical Performance Characteristics

ADJ Source Current vs. Temperature

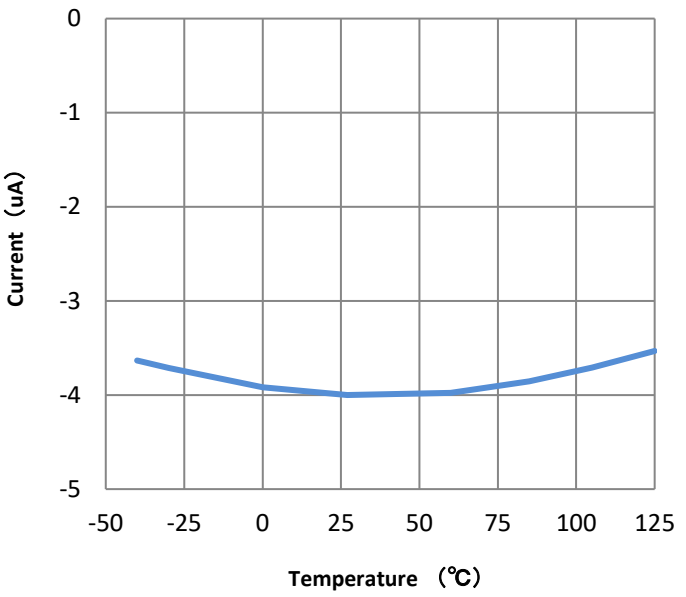

Maximum Duty Cycle vs. Temperature

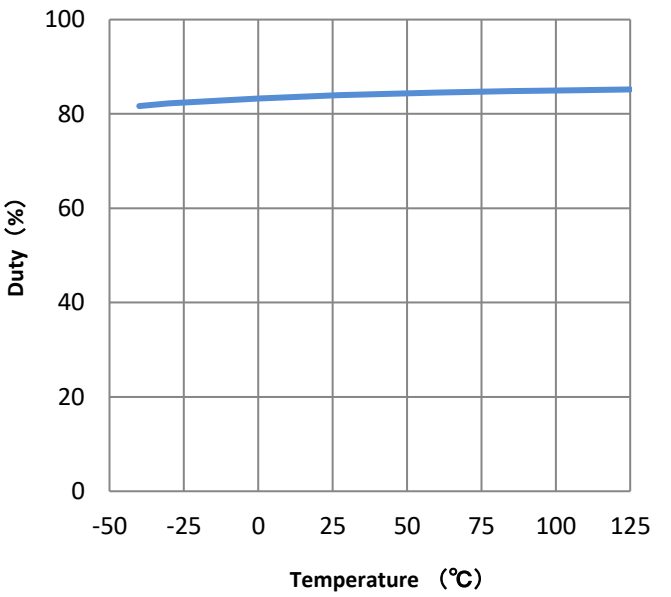

FB Source Current vs. Temperature

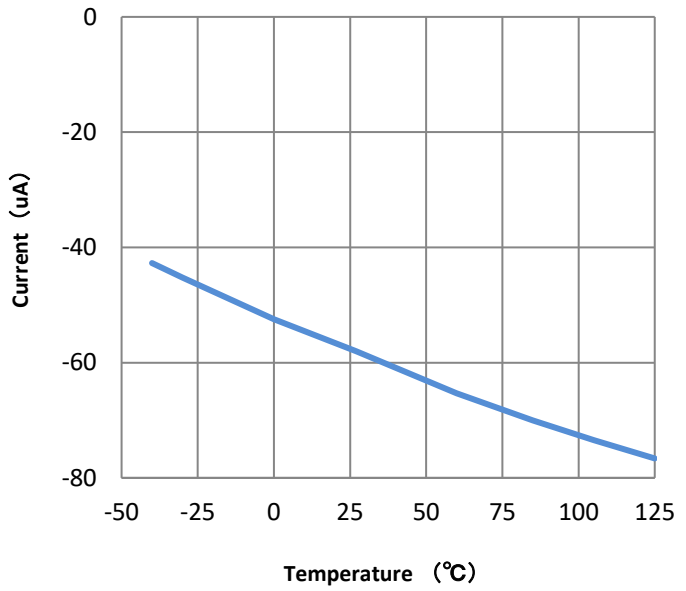

Gate Stop Voltage 1 vs. Temperature

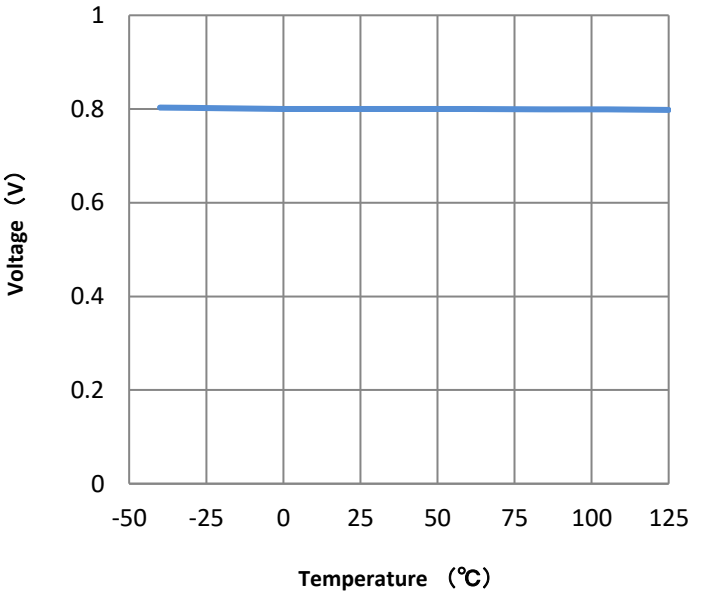

Gate Stop Voltage 2 vs. Temperature

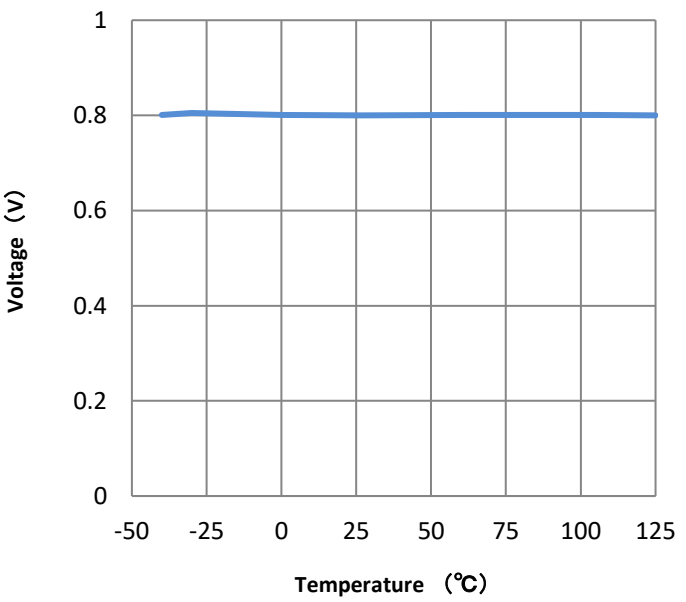

Gate Stop Voltage Hysteresis Range vs. Temperature

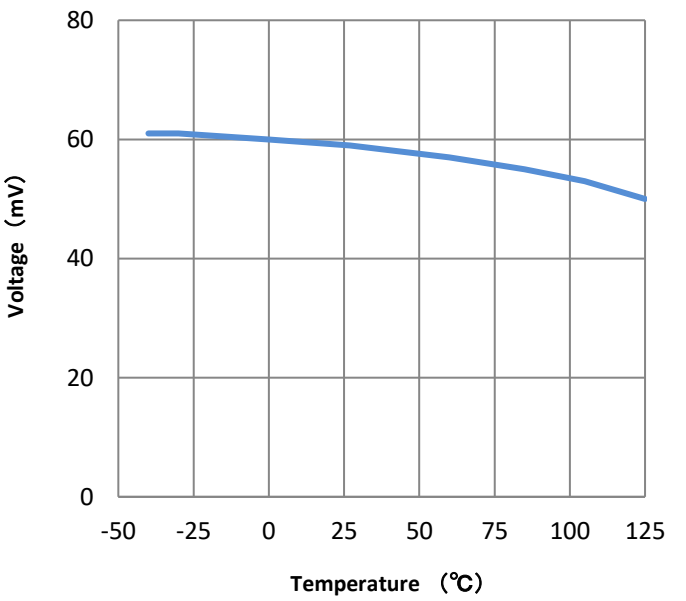

Typical Performance Characteristics

Over Load Detection Voltage vs. Temperature

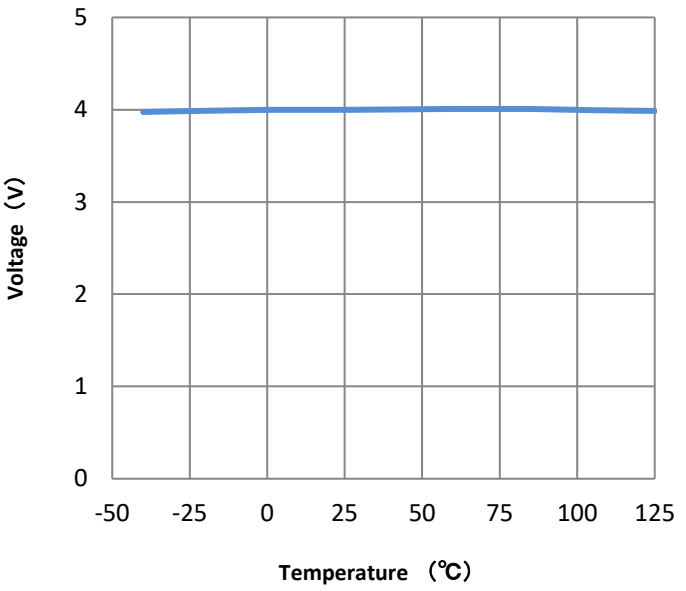

Over Load Timer vs. Temperature

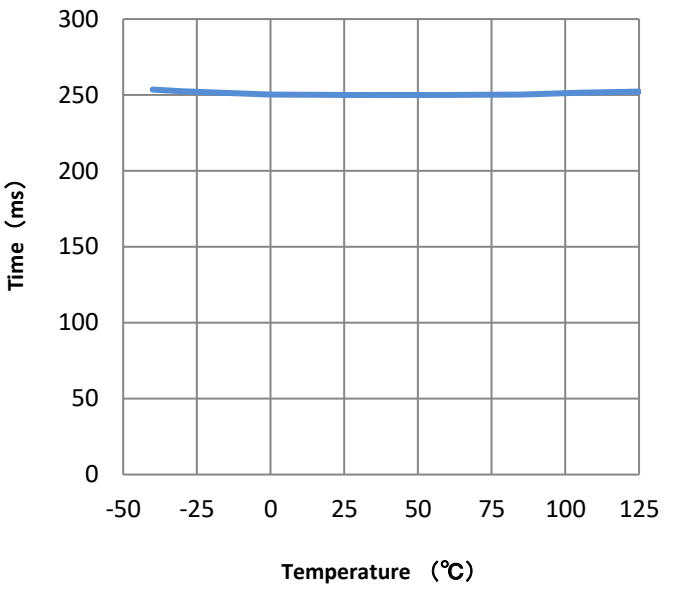

Restart Timer vs. Temperature

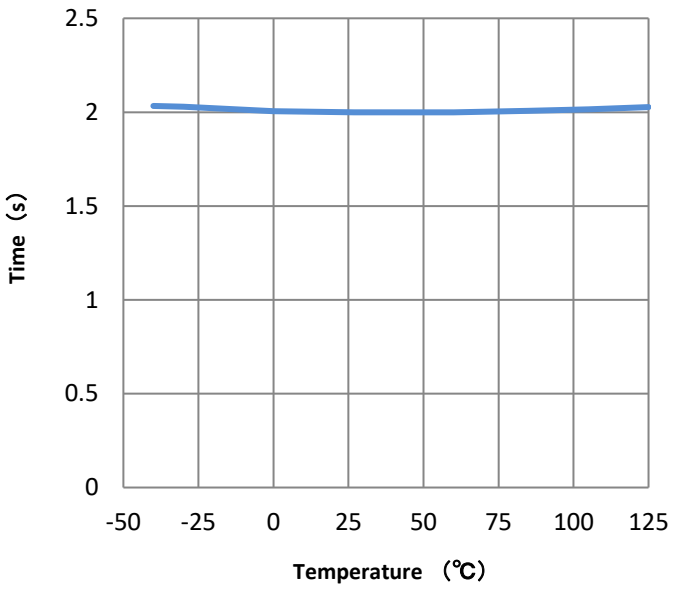

Voltage Gain vs. Temperature

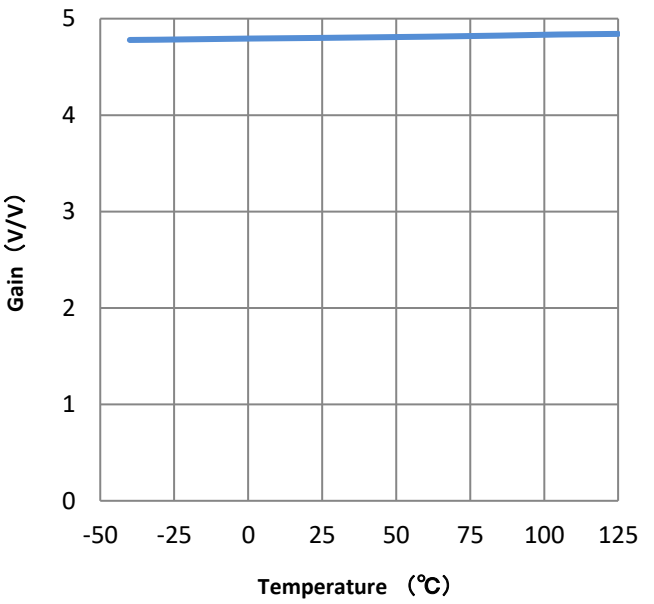

Over Current Detection Voltage 1 vs. Temperature

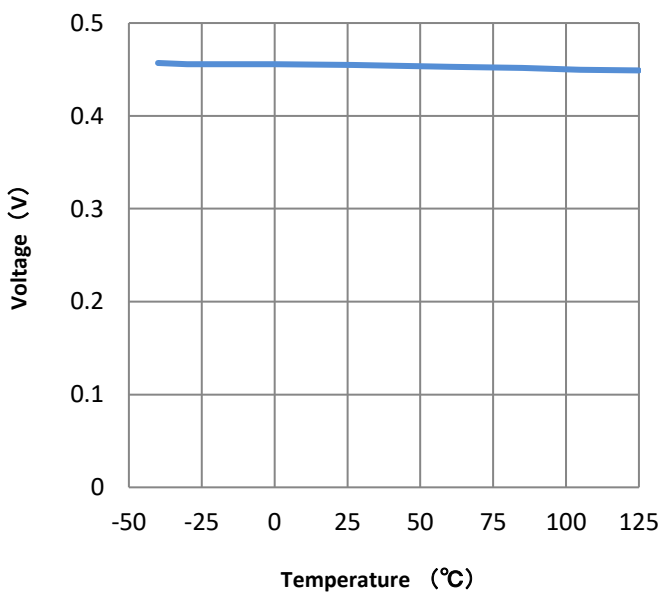

Over Current Detection Voltage 2 vs. Temperature

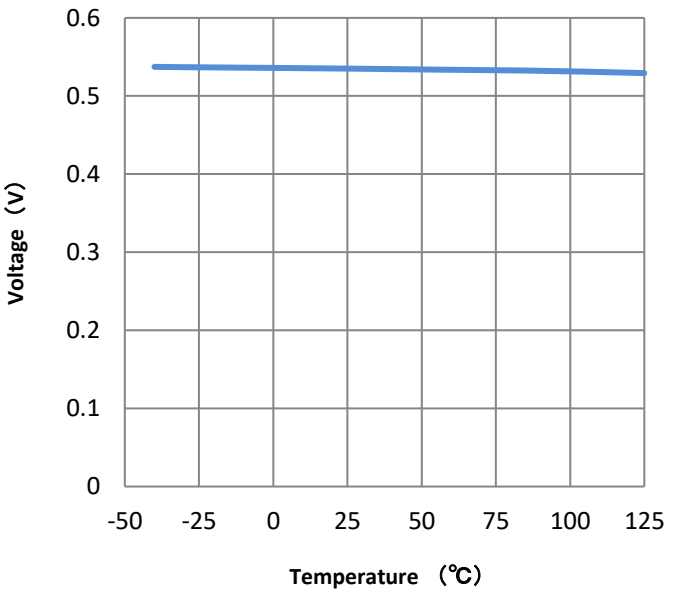

Typical Performance Characteristics

Minimum On Time 1 vs. Temperature

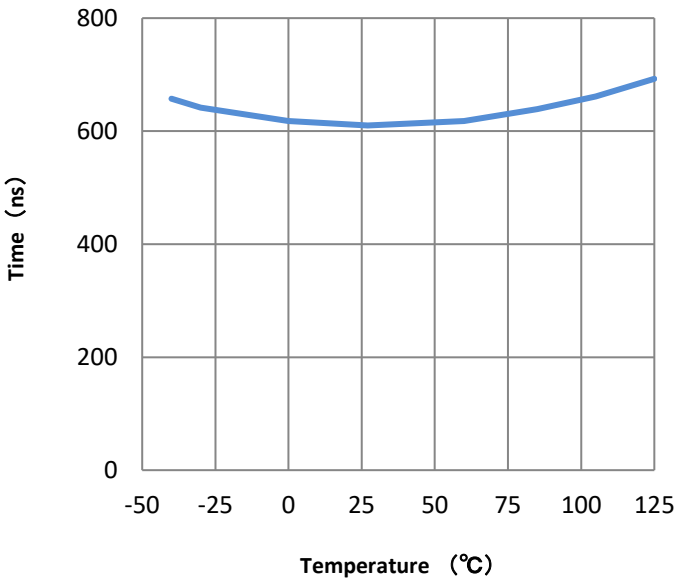

Minimum On Time 2 vs. Temperature

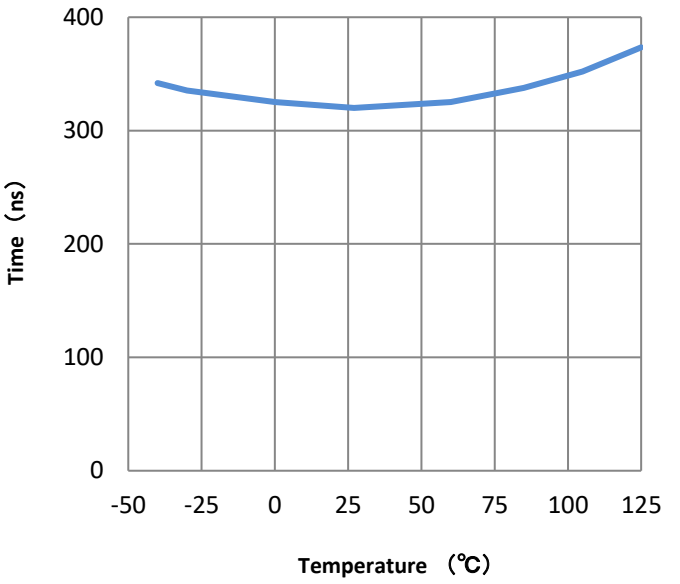

CS Source Current vs. Temperature

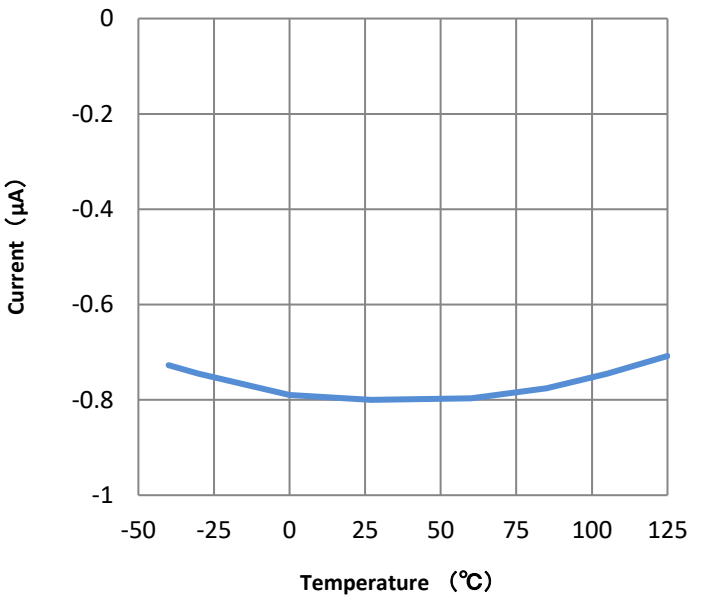

CS Latch Stop Detection Voltage vs. Temperature

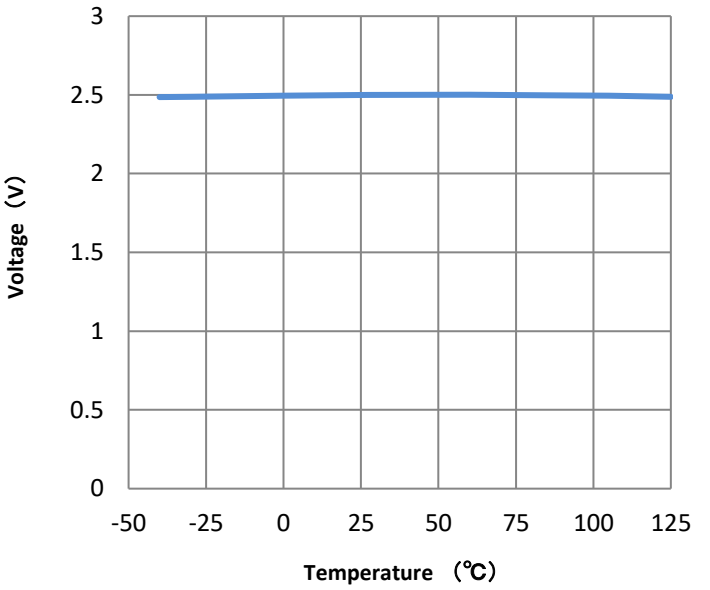

L Output Voltage vs. Temperature

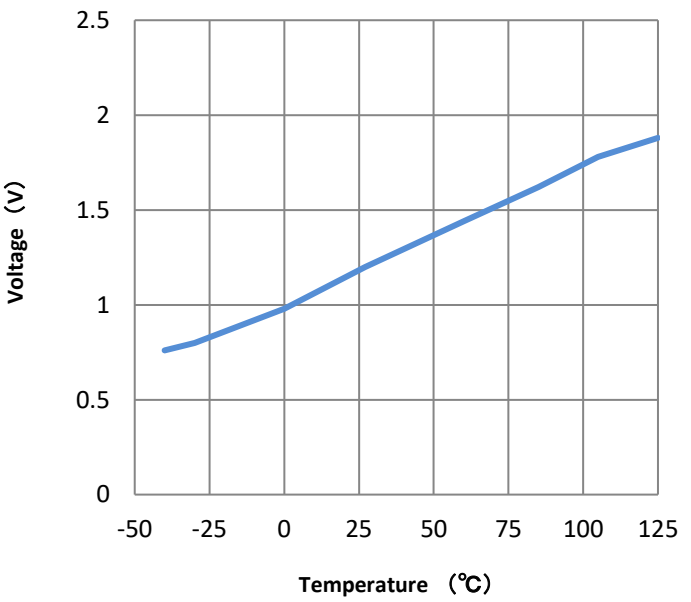

H Output Voltage vs. Temperature

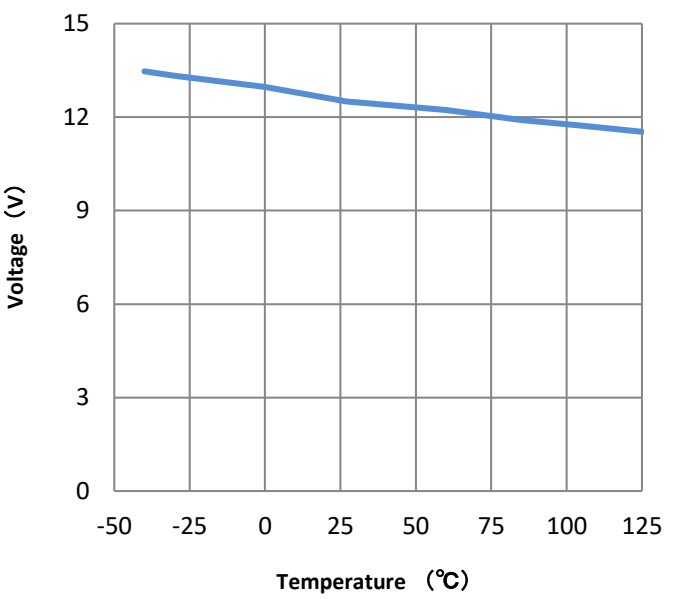

Typical Performance Characteristics

Rise Time vs. Temperature

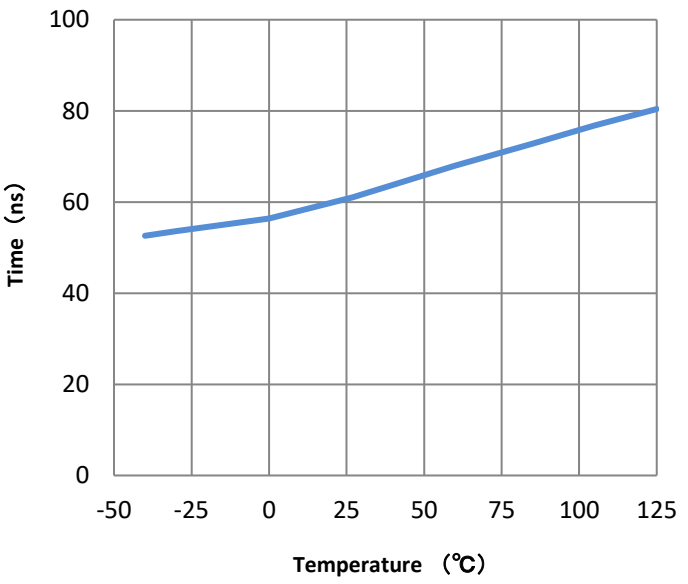

Fall Time vs. Temperature

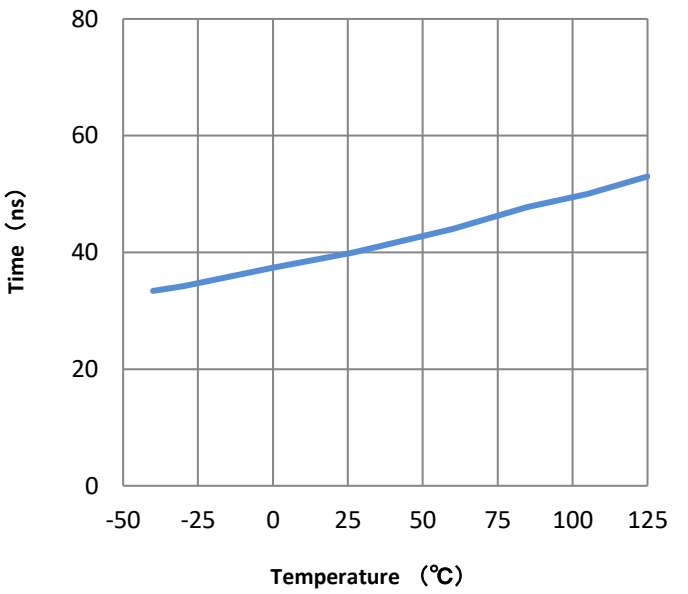

Soft Start Time 1 vs. Temperature

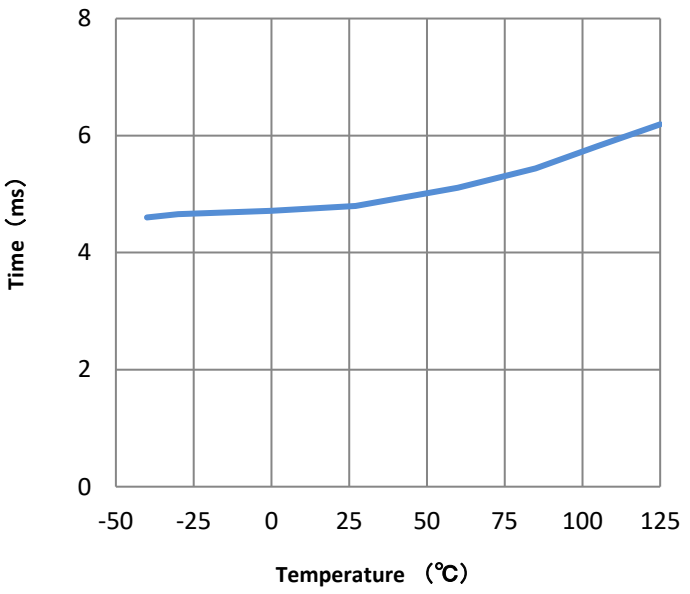

Soft Start Time 2 vs. Temperature

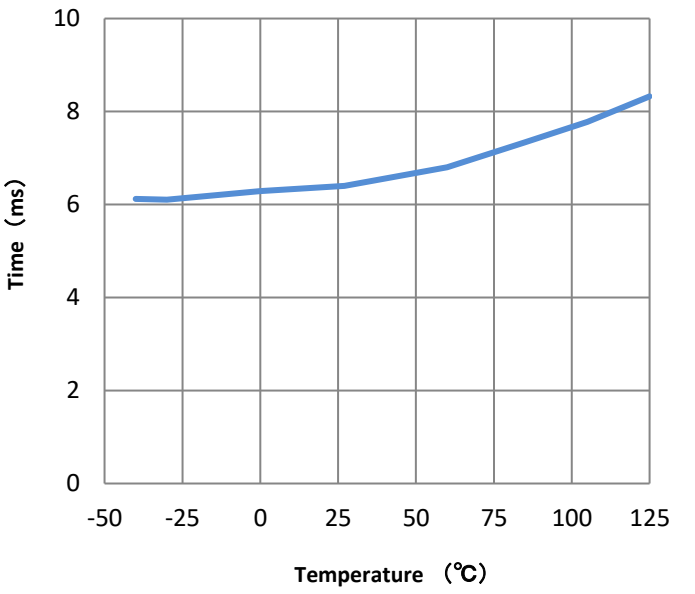

Maximum Frequency 1 vs. Temperature

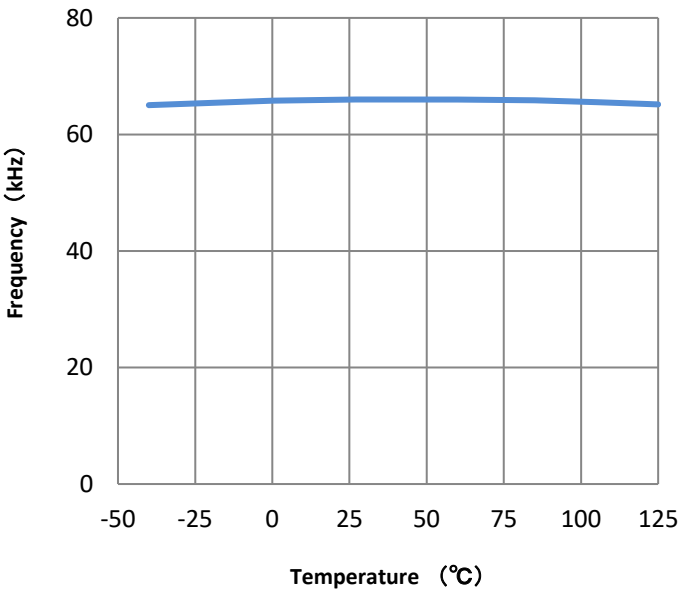

Maximum Frequency 2 vs. Temperature

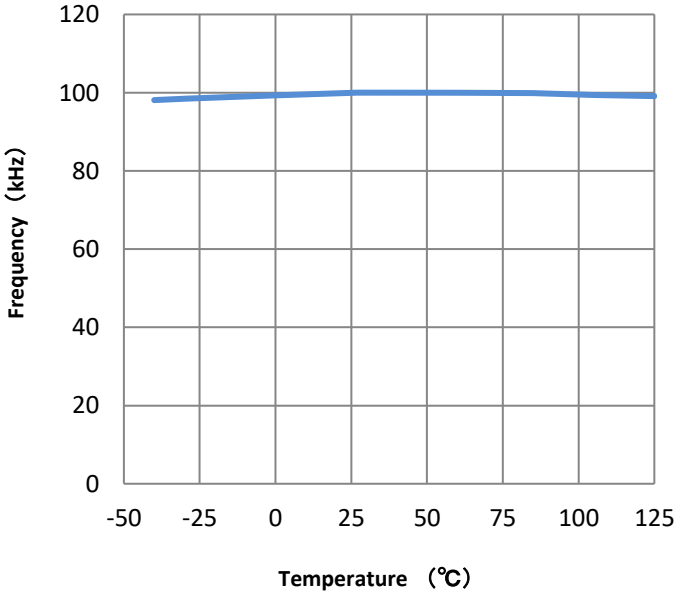

Typical Performance Characteristics

Frequency Decrease Biginning Voltage vs. Temperature

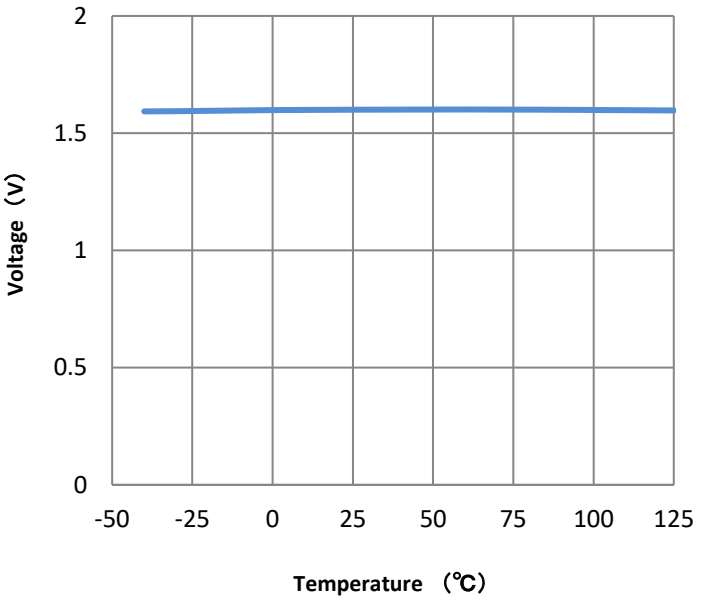

Frequency Increase Biginning Voltage vs. Temperature

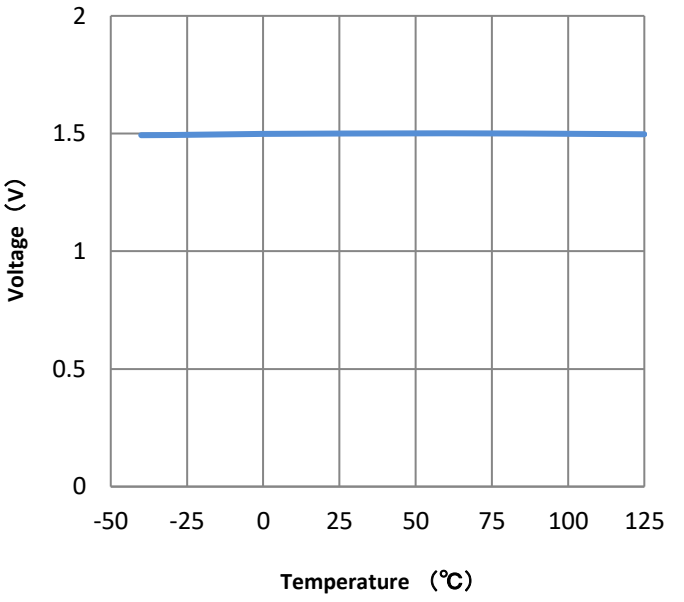

Minimum Frequency 1 vs. Temperature

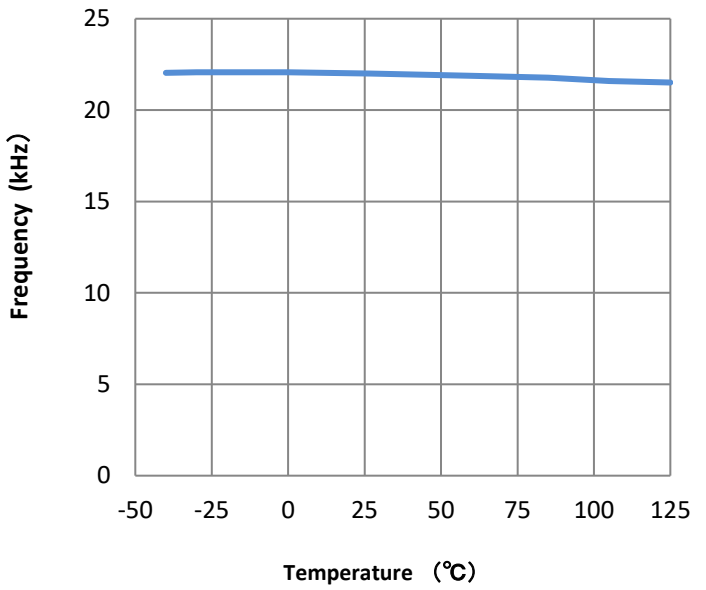

Minimum Frequency 2 vs. Temperature

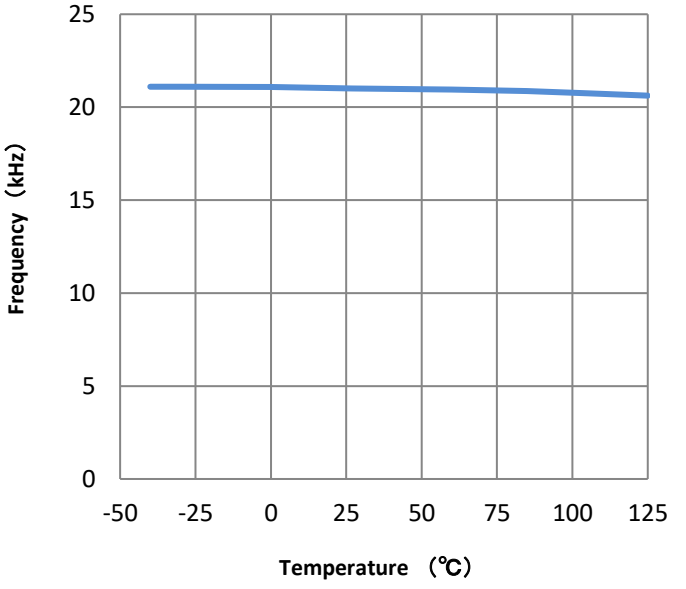

Dimensions

Package : SOP-8J

UNIT	mm

