MITSUMI

The QR control IC for AC-DC converter

MM3661 Series

Overview

The MM3661 is the current mode QR controller IC, designed for flyback converter.

This IC can substantially reduce standby power by the start up circuit using the 500V high breakdown process, and burst mode operating at light load.

It operates bottom turn on by quasi resonant and the frequency is reduced by bottom skip that minimizes power loss improves average efficiency.

The IC which has various protection functions can assist safety design of power supply.

Features

- Start up circuit by 500V high breakdown process reduce start up circuit loss.
- Current mode PWM controller（maximum oscillating frequency 75kHz）
- Frequency reduction function in load of middle range.
- Burst operation function at light load.
- The over current protection function(correct to the two-step in accordance with change of the input)
- Built-in various protection functions.
  (soft start, overcurrent protection, overload protection, overvoltage protection, external latch protection)
- The operational interaction function with the PFC circuit. （X rank）

Main specifications

- HV Pin Input Voltage : 500V
- Operating Supply Voltage : 10V to 24V
- Supply Current : Typ. 0.87mA
- Shortest Blanking Time : 13.3us to 36us

Packages

- SOP-8J [A~F]
- SOP-10A[X]

Application

- Flat panel TV
- Game equipment
- AC/DC Adapters
- Various Power Supplies

MinebeaMitsumi
Passion to Create Value through Difference

Mitsumi Search
https://mtm-sec.mitsumi.co.jp/web/ic/

Mitsumi Electric CO.,LTD.
Semiconductor Business Division
Strategy Engineering Department
tel:+81-46-230-3470

- All brand names, logos, product names, trade names and service names described here are trademarks or registered trademarks of their respective companies or organizations.
- Any products mentioned in this leaflet are subject to any modification in their appearance and others for improvements without prior notification.
- The details listed here are not a guarantee of the individual products at the time of ordering. When using the products, you will be asked to check their specifications.

July, 2022 Rev.0

Model Name

M M 3 6 6 1 □ F F E H

Series name (A) (B) (C) (D) (E)

(A)	
Function Type	
A	Latch for overload protection
B	Restart when overload protection
C	No input voltage correction for overcurrent detection protection
D	CS terminal latch stop detection
E	CS terminal latch stop detection
F	No burst mode operation
X	With PFC circuit interlocking function

(B) Packing : SOP-8J,SOP-10A
(C) Packing Specifications : F Housing
(D) Emboss Tape
(E) Halogen-free

Block Diagram

A～F rank

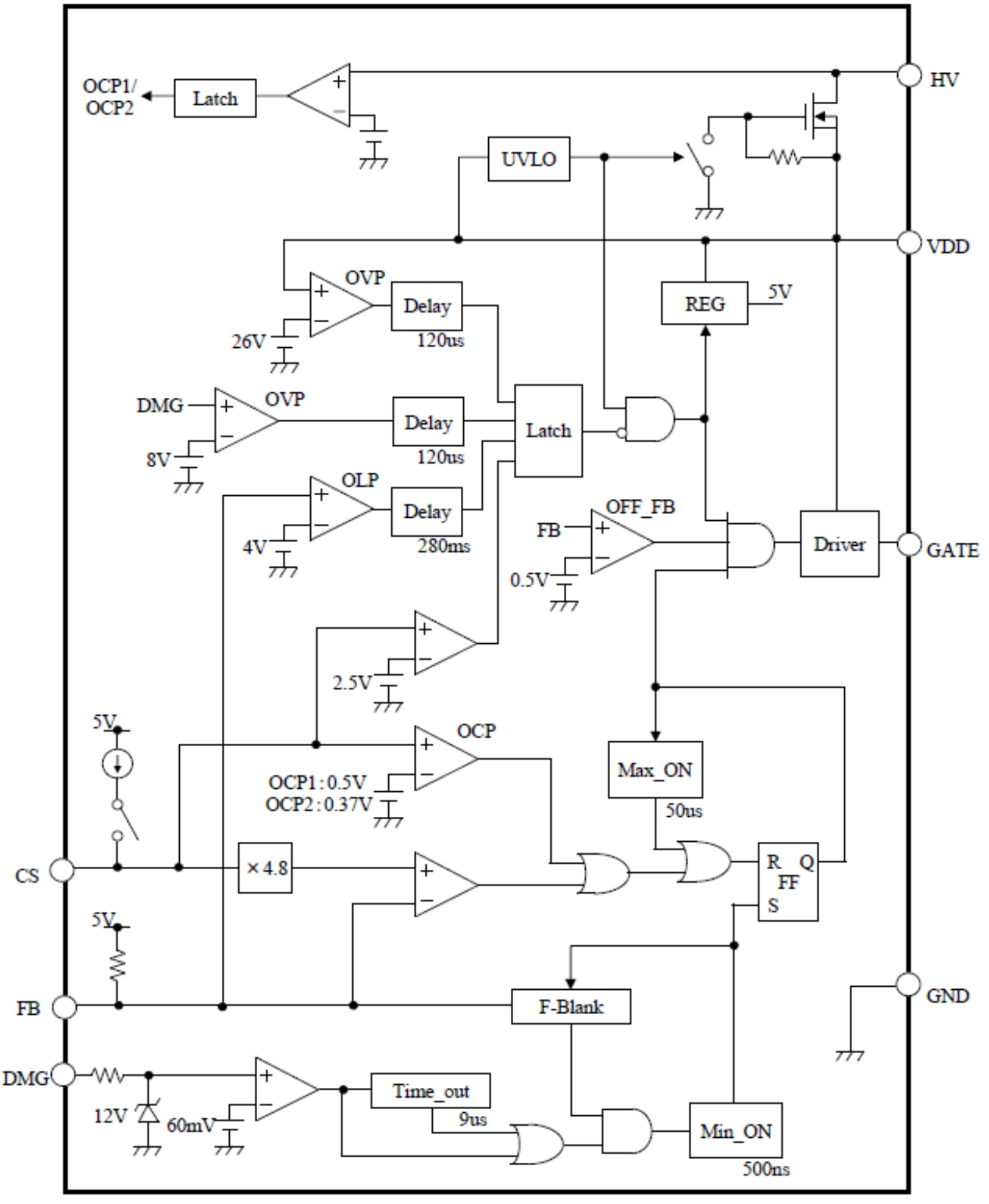

Block Diagram

X rank

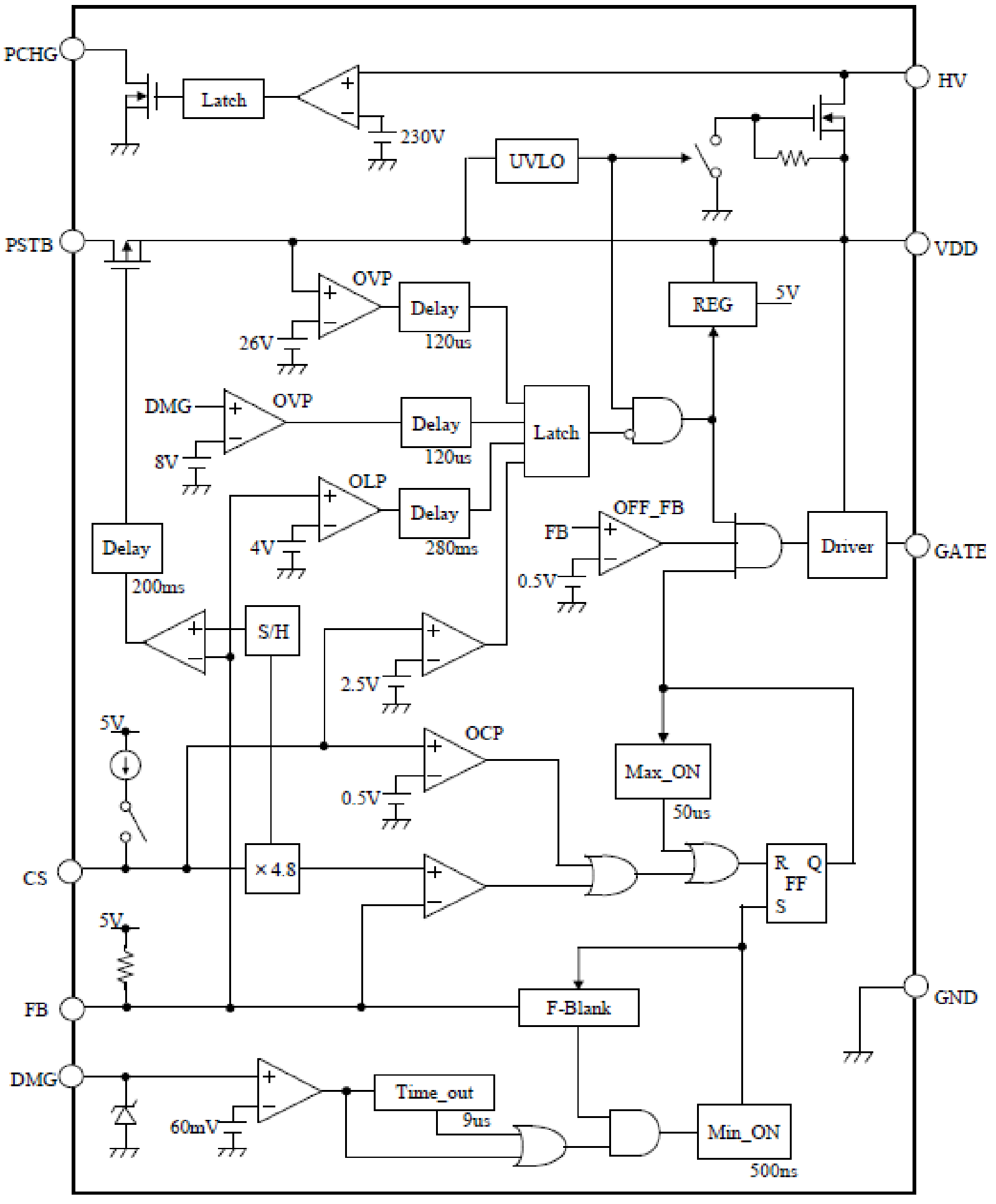

Pin Configuration

■ SOP-8J

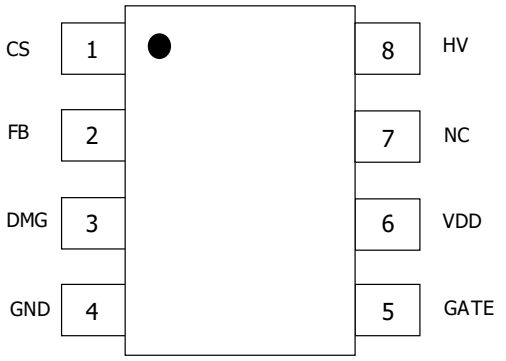

Pin No.	Symbol	Function
1	CS	Current sense pin
2	FB	Feedback input pin
3	DMG	Zero current detect pin
4	GND	Ground pin
5	GATE	Output pin
6	VDD	Power supply input pin
7	NC	No connection
8	HV	High voltage startup pin

■ SOP-10A（X rank）

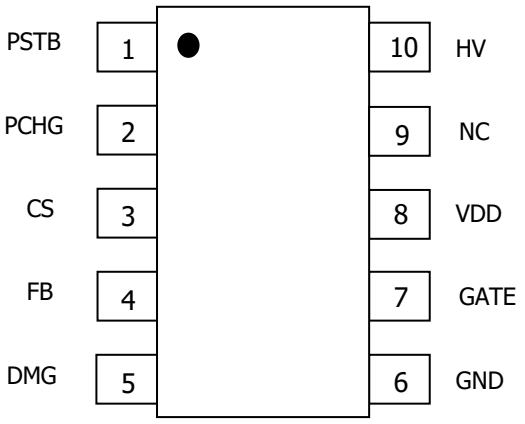

Pin No.	Symbol	Function
1	PSTB	PFC circuit on / off output terminal
2	PCHG	PFC circuit voltage adjust output terminal
3	CS	Current sense pin
4	FB	Feedback input pin
5	DMG	Zero current detect pin
6	GND	Ground pin
7	GATE	Output pin
8	VDD	Power supply input pin
9	NC	No connection
10	HV	High voltage startup pin

Absolute Maximum Ratings

(Ta=25℃, unless otherwise specified)

Item	Symbol	Min.	Max.	Unit
Storage temperature	TSTG	-40	150	℃
Operating Temperature	TOPR	-30	125	℃
VDD Pin Voltage	VDD	-0.3	28	V
PSTB Pin Voltage	VPSTB	-0.3	VDD	V
PSTB Pin Current	IPSTB	-	35	mA
PCHG Pin Current	VPCHG	-0.3	28	V
CS Pin Voltage	VCS	-0.3	5	V
FB Pin Voltage	VFB	-0.3	5	V
DMG Pin Voltage *1	VDMG	-0.3	28	V
DMG Pin Current *1	IDMGSOURCE	-	-2	mA
GATE Pin Voltage	VGATE	-0.3	VDD	V
Gate Pin Peak Current	IOH	-	-0.5	A
	IOL	-	1	A
HV Pin Voltage	VHV	-0.3	500	V
Power Dissipation (Alone)_SOP-8J	Pd_8J	-	300	mW
Power Dissipation (Alone)_SOP-10A	Pd_10A	-	350	mW

NOTES

*1 Negative voltage on DMG pin is clamped about -0.6V because of ESD protection diode.
To avoid large current of the diode, adjust external resistors.

Recommended Operating Conditions

Item	Symbol	Min.	Max.	Unit
Operating Supply Voltage	Vop	10	24	V
HV Pin Input Voltage	Vhvop	100	450	V
HV Pin Connection Resistance	RHV	2.2	22	kΩ
VDD Pin Capacitance	CVDD	0.47	100	uF
Operating Temperature	TOP	-30	85	℃

Electrical Characteristics

(TA=25°C, VDD=15V, VFB=3V, VCS=VDMG=0V unless otherwise specified)

Parameter	Symbol	Conditions	Min.	Typ.	Max.	Unit	*2
高圧入力部 （HV端子）							
HV Input Current1	Ihv1	VHV=450V, VDD=22V,FB=	19	38	57	uA	A
HV Input Current2	Ihv2	VHV=120V, VDD=0V,FB=0V A～F rank	6	8.5	11	mA	A
HV Input Current3	Ihv3	VHV=120V, VDD=0V,FB=0V X rank	7.5	9.9	12.3	mA	A
Over Current Conversion Voltage	Vhocc	FB=0V,HV=120V→260V A～F rank	210	230	250	V	B
PFC Output Conversion Voltage	Vpfc	FB=0V,HV=120V→260V X rank	210	230	250	V	B
Power Supply Input Section (VDD Pin)							
Operating Start Voltage1	Vddon1	FB=0V,VDD=0V→23V A,B,C,E,F rank	14.3	15.8	17.3	V	B
Operating Start Voltage2	Vddon2	FB=0V,VDD=0V→23V D rank	8.4	9.7	11	V	B
Operating Start Voltage3	Vddon3	FB=0V,VDD=0V→23V X rank	20	21	20	V	B
Operating Stop Voltage1	Vddoff1	FB=0V,VDD=15→0V A～F rank	7	7.8	8.6	V	B
Operating Stop Voltage2	Vddoff2	FB=0V,VDD=0V→23V X rank	8	9	10	V	B
Upper level Voltage in Latch	Vddlat1	HV=120V,FB=OPEN	-	13.4	14.1	V	C
Lower level Voltage in Latch	Vddlat2	HV=120V,FB=OPEN	11.2	12.2	-	V	C
Supply Current1	Idd1	FB=2V CL=OPEN A～F rank	0.67	0.87	1.07	mA	D
Supply Current2	Idd2	FB=2V CL=OPEN X rank	0.56	0.72	0.88	mA	D
Supply Current3	Idd3	FB=0V CL=OPEN X rank	-	0.67	0.82	mA	D
Supply Current in Latch1	ICHLAT1	VDD=11V,FB=Open B,C,D,E,F rank	0.49	0.65	0.79	mA	D
Supply Current in Latch2	ICHLAT2	VDD=11V,FB=Open A rank	50	80	130	uA	D
Supply Current in Latch3	ICHLAT3	VDD=11V,FB=Open X rank	63	78.8	94.6	uA	D
VDD Over Voltage Detection	Vddovp	VDD=15V→28V	24.2	26	27.8	V	E
VDD Over Voltage Detection Delay Time *3	Tvddovp	VDD=15V→28V	60	120	180	us	E

Electrical Characteristics

(TA=25°C, VDD=15V, VFB=3V, VCS=VDMG=0V unless otherwise specified)

Parameter	Symbol	Conditions	Min.	Typ.	Max.	Unit	*2
Feedback Section (FB Pin)							
GATE Output Stop Voltage	Vfboff	FB=0.6V→0.4V	0.45	0.5	0.55	V	E
GATE Output Stop Hysteresis Width	Vfboffhys	FB=0.4V→0.6V	-	50	-	mV	E
FB Source Current1	Ifb1	FB=0V A～F rank	120	170	250	uA	F
FB Source Current2	Ifb2	FB=0V X rank	45	60	75	uA	F
Over Load Detection Voltage	Vfbolp	FB=3V→4.7V	3.5	4	4.5	V	E
Over Load Timer *3	Tfbolp	FB=3V→4.7V	220	280	340	ms	E
Restart Timer *3	Tars	FB=3V→4.7V B,C,D,E,F rank	-	2	-	s	E
Oscillator Frequency Fall Start Voltage *3	Vfbfall		1.47	1.6	1.73	V	-
Oscillator Frequency Fall Stop Voltage *3	Tfbrise	A,B,C,D,E,X rank	0.73	0.8	0.87	V	-
PFC ON Detect Voltage1 *3	Vpfcon1	HV=120V,FB=0.6V→2V, CS=6.8kΩ X rank	0.78	0.98	1.18	V	N
PFC ON Detect Voltage2 *3	Vpfcon2	HV=120V,FB=0.6V→2V, CS=6.8kΩ X rank	-	0.93	-	V	N
PFC ON Detect Hysteresis Width *3	Vpfchys	X rank	-	115	-	mV	-
PFC Off Detect Timer	Vpfcoff	CS=0.2V,FB=2V→0.6V X rank	160	200	250	ms	O
Current Detection Section (CS Pin)							
Voltage Gain *3	Avcs		-	4.8	-	V/V	G
Over Current Detection Voltage1	Vthcs1		0.475	0.5	0.525	V	B
Over Current Detection Voltage2	Vthcs2	HV=250V,CS=0→0.6V A,B,D,E rank	0.344	0.366	0.388	V	B
Over Current Detection Voltage3	Vthcs3	HV=250V,CS=0→0.6V X rank	0.408	0.43	0.452	V	B
CS Latch Stop Detection Voltage	Vthcslat	CS=2.2V→2.8V F,X rank	2.25	2.50	2.75	V	G
Minimum ON Time	Tonmin	CS=1V	350	500	650	ns	G
GATE Output Delay Time *3	Tpdcs		-	200	-	ns	-
CS Source Current	ICS2	DMG=0V→1V	-	30	-	uA	H
Zero Current Detection Section (DMG Pin)							
Zero Current Detection Voltage	Vthdmg1	DMG=1V→0V	30	60	90	mV	I
Zero Current Detection Release Voltage	Vthdmg2	DMG=0V→1V	150	250	340	mV	I
Zero Current Detection Delay Time	Tdmgovp	DMG=1V→0V	-	200	-	ns	J
DMG Over Voltage Detection	Vdmgovp	DMG=7.5V→8.5V	7.6	8	8.4	V	I
DMG Over Voltage Detection Delay Time	Tdmgovp	DMG=7.5V→8.5V	60	120	180	us	I

Electrical Characteristics

(TA=25°C, VDD=15V, VFB=3V, VCS=VDMG=0V unless otherwise specified)

Parameter	Symbol	Conditions	Min.	Typ.	Max.	Unit	*2
Oscillator Section							
Maximum ON Time	Tonmax		35	50	70	us	G
Shortest Blanking Time1 *3	Toffmin1	FB=2V	12	13.3	14.6	us	-
Shortest Blanking Time2 *3	Toffmin2	FB=0.65V	34	36	39	us	-
Shortest Blanking Time3 *3	Toffmin3	FB=0.2V F rank	-	1	-	ms	-
Time Out	Tout		6	9	12	us	G
Output Section (GATE Pin)							
L Output Voltage	VoutL	Iol=100mA	0.55	1.25	2.25	V	K
H Output Voltage	Vouth	Ioh=-100mA	10	12	14	V	L
Rise Time	Trise	CL=1nF	30	60	100	ns	M
Fall Time	Tfall	CL=1nF	20	40	70	ns	M
Soft Start Section							
Soft Start Time *3	Tss	FB=2V	-	3.7	-	ms	-
PFC ON/OFF Section (PSTB Pin)							
PSTB Output ON Resistance	Ronpstb	HV=120V,CS=0.2V X rar	-	40	60	Ω	P
PFC Output Conversion Section (PCHG Pin)							
PCHG Output ON Resistance	Ronpchg	HV=260V X rank	170	200	230	Ω	Q
PCHG Off Leak Current	Ipchgoff	HV=120V,PCHG=15V,X rank	-	-	0.01	uA	Q

NOTES

*2 Symbols for the test circuits.
*3 Guaranteed by design

Test Circuits

TEST CIRCUIT A

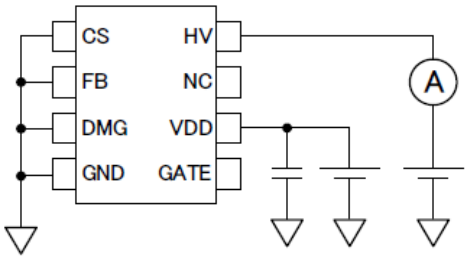

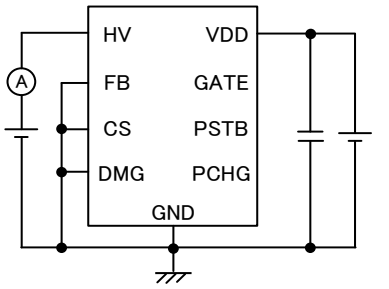

TEST CIRCUIT B

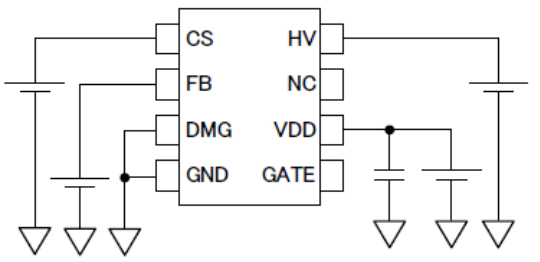

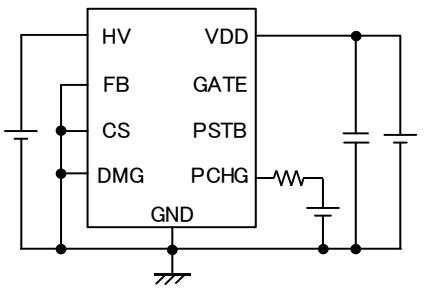

TEST CIRCUIT C

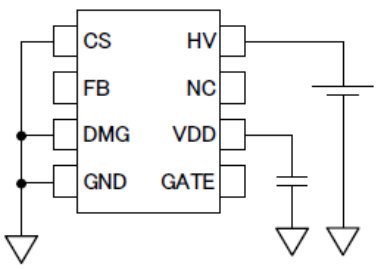

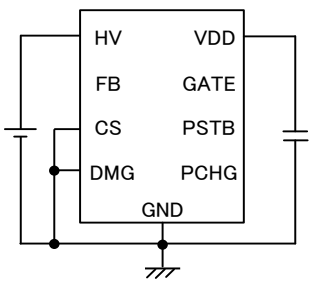

TEST CIRCUIT D

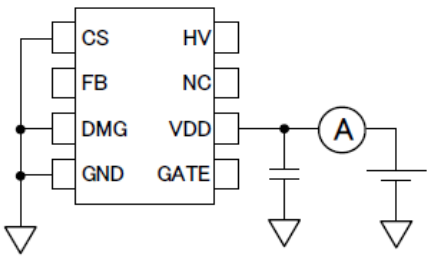

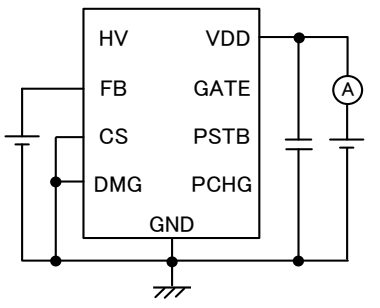

TEST CIRCUIT E

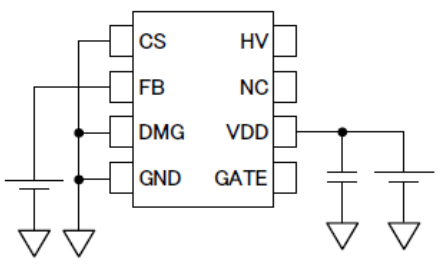

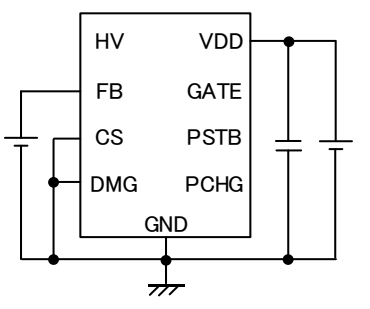

Test Circuits

TEST CIRCUIT F

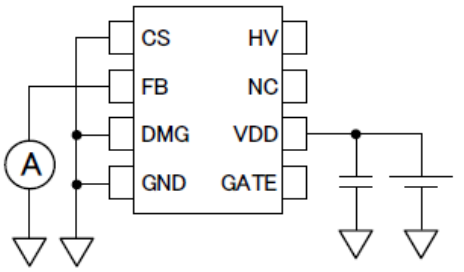

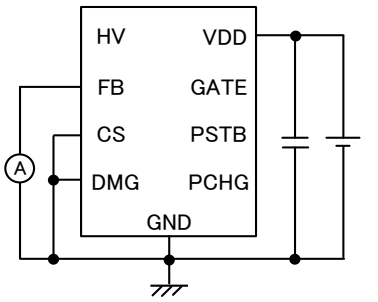

TEST CIRCUIT G

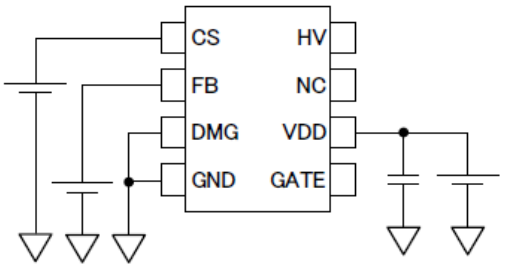

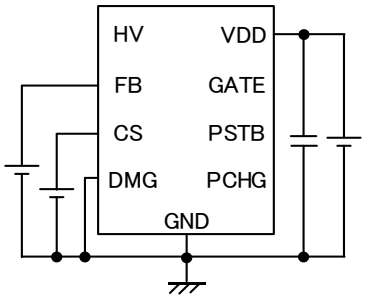

TEST CIRCUIT H

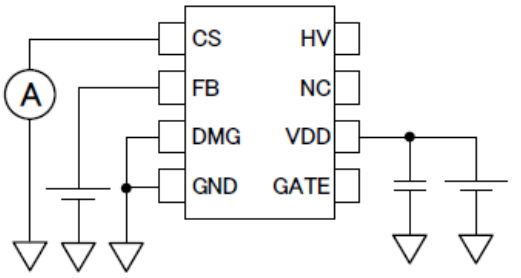

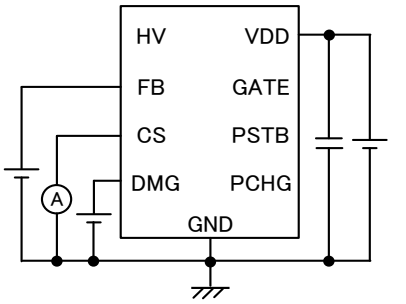

TEST CIRCUIT I

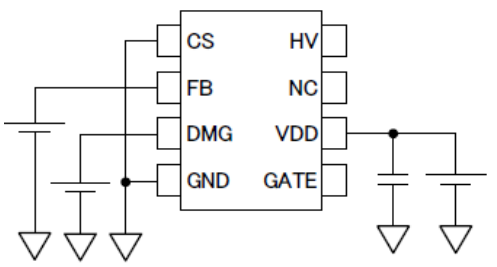

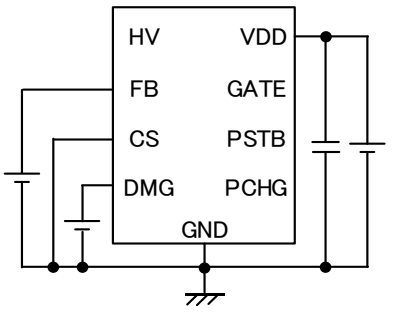

TEST CIRCUIT J

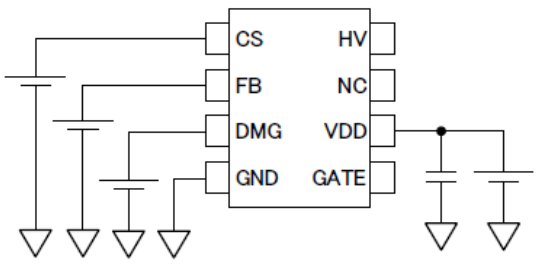

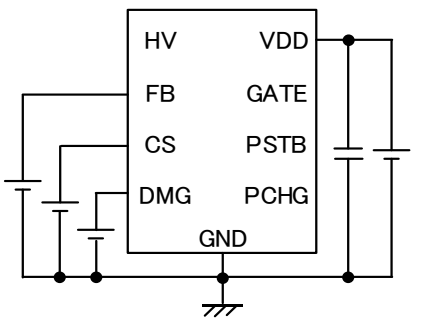

Test Circuits

TEST CIRCUIT K

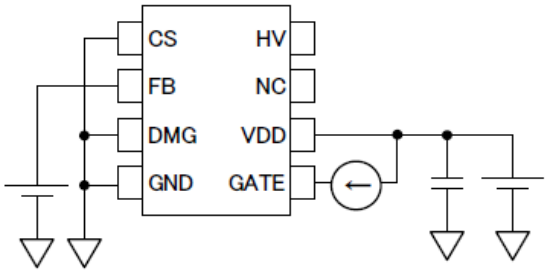

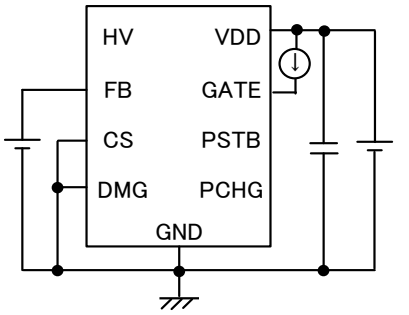

TEST CIRCUIT L

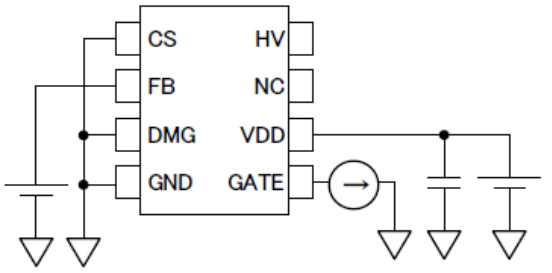

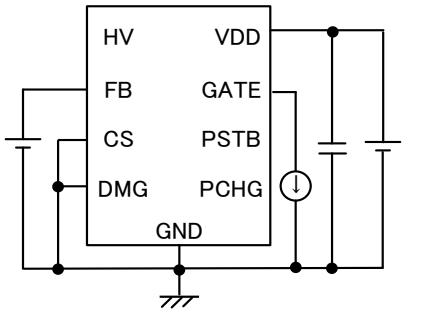

TEST CIRCUIT M

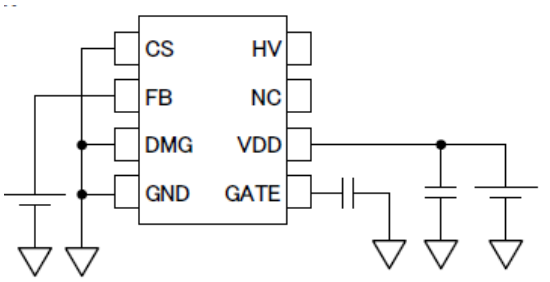

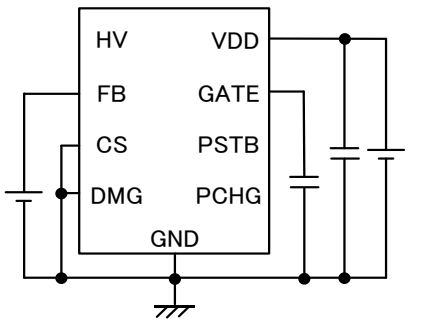

TEST CIRCUIT N

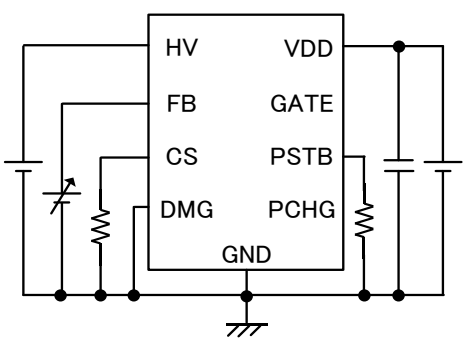

TEST CIRCUIT O

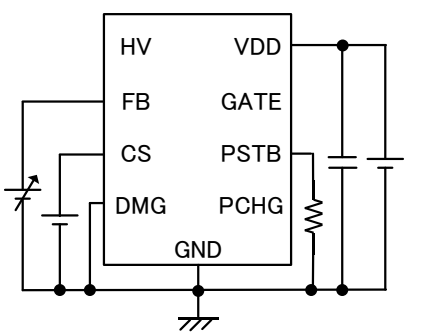

TEST CIRCUIT P

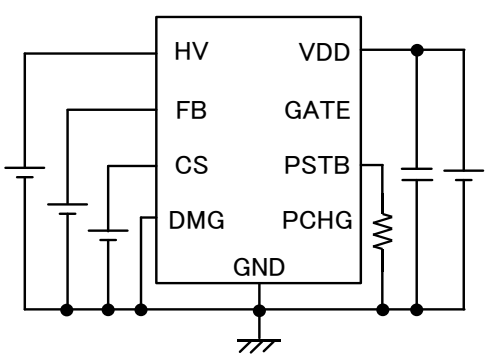

TEST CIRCUIT Q

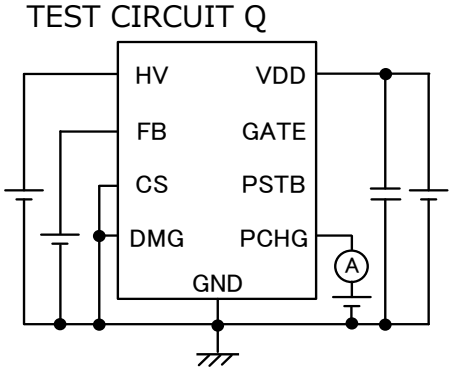

Timing Chart

Start up

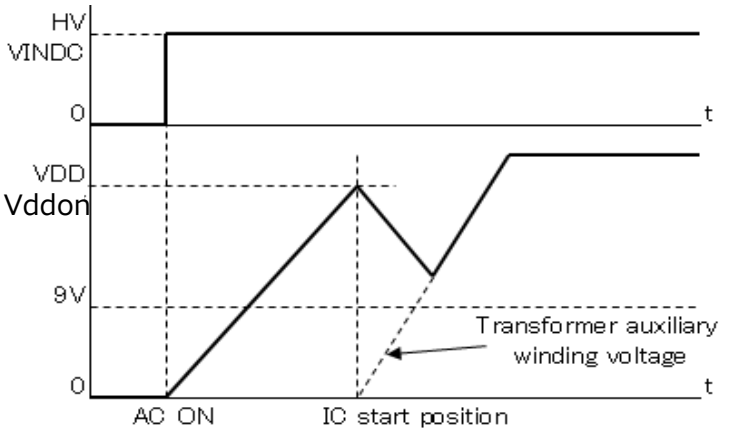

Soft start

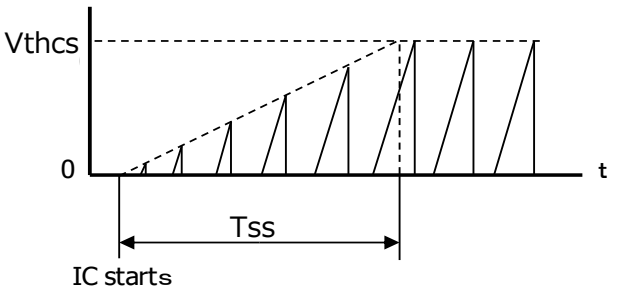

Current mode control

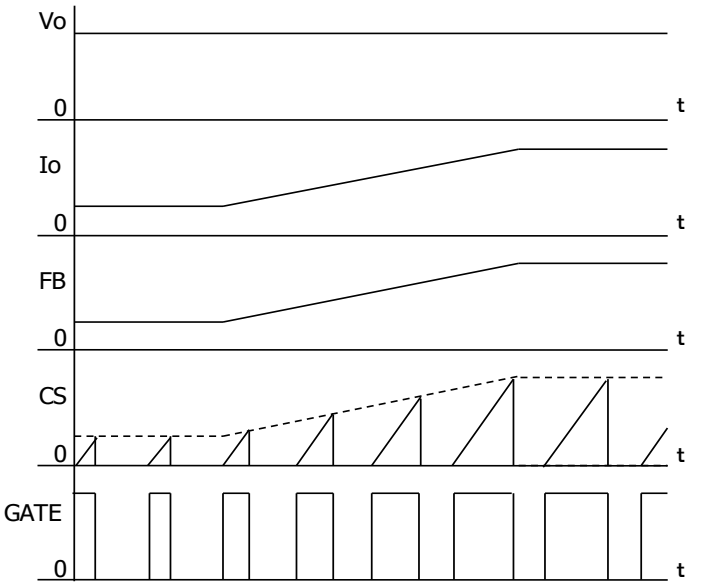

Timing Chart

Zero current detection

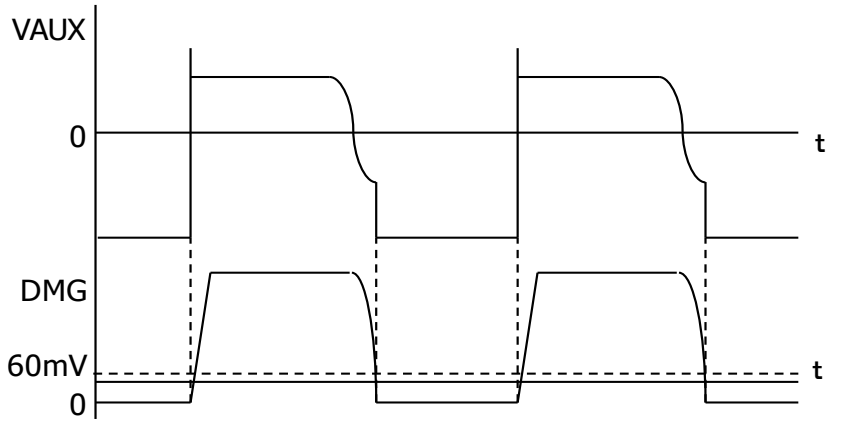

Frequency reduction function

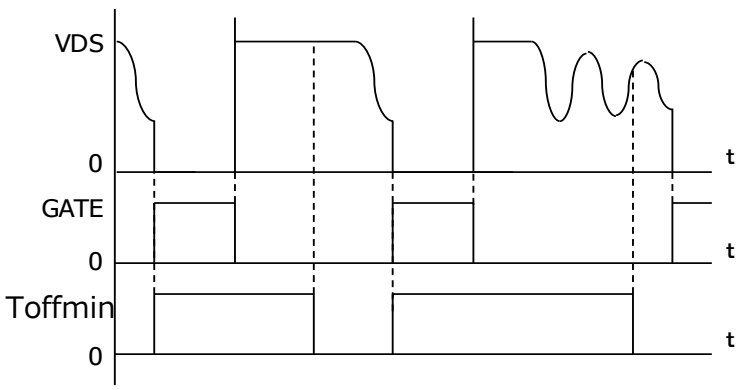

Burst mode operation

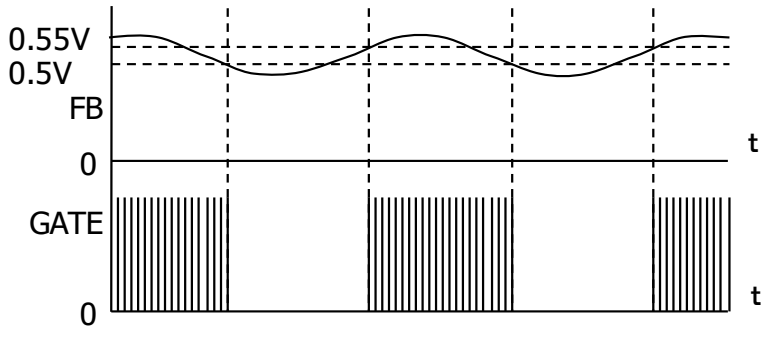

Timing Chart

Over current protection

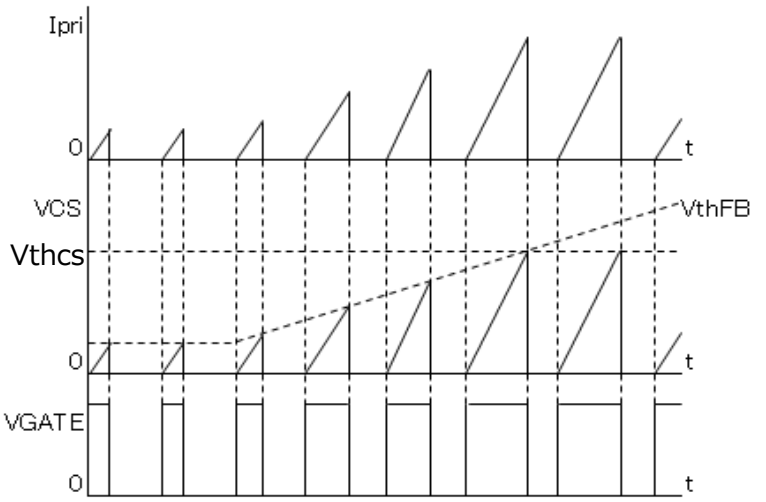

Over load protection（Latch Type）

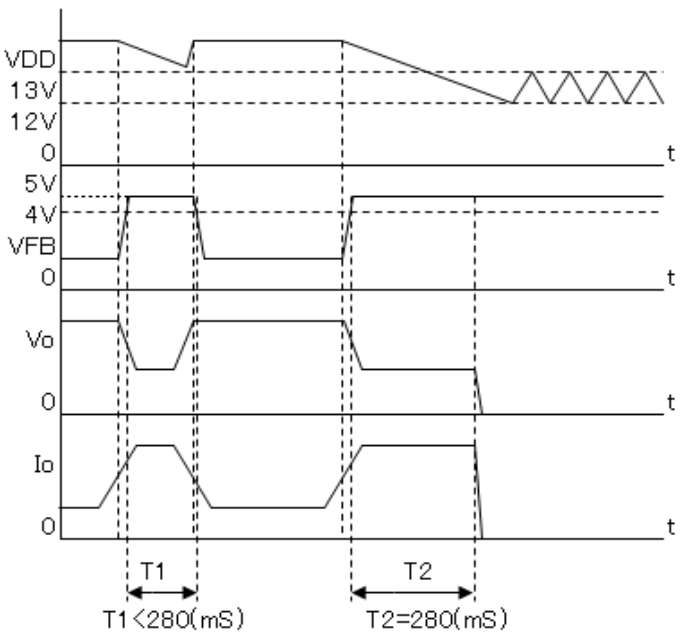

Timing Chart

Over load protection（Auto restart Type）

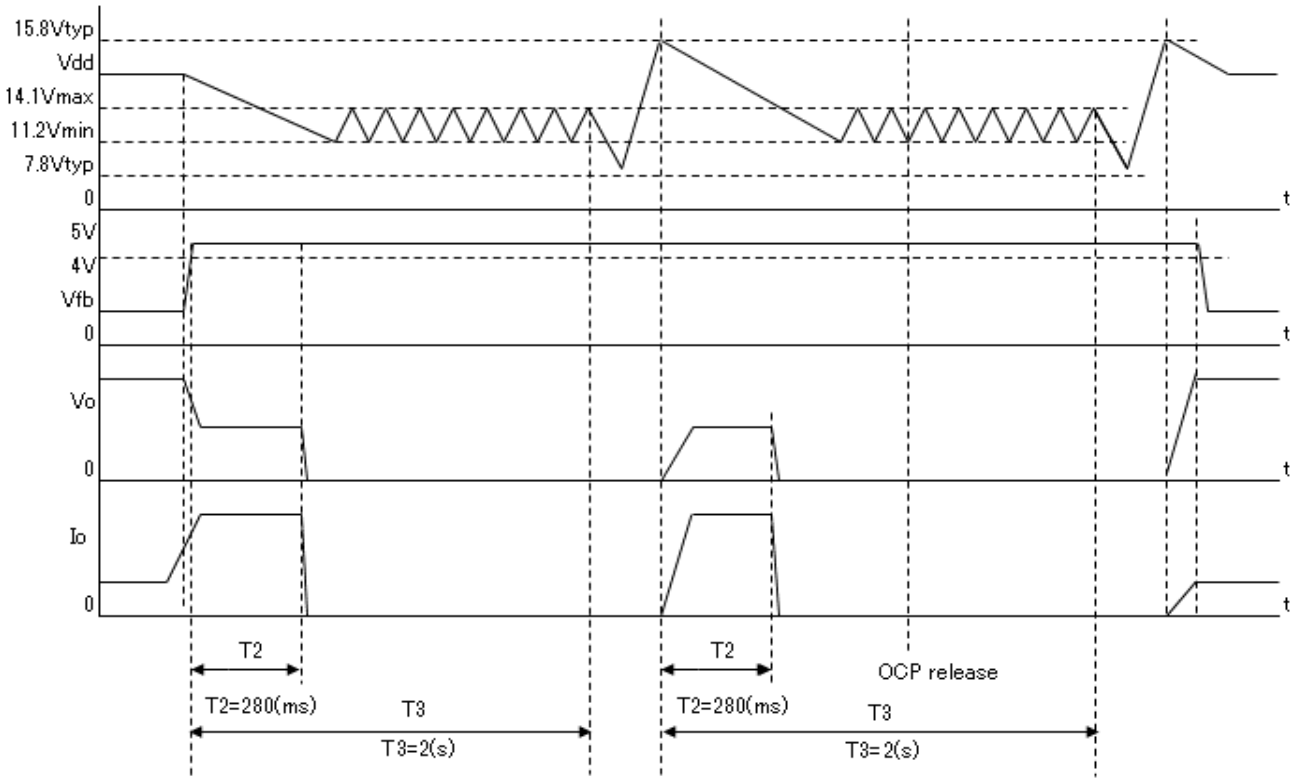

Over voltage protection（VDD）

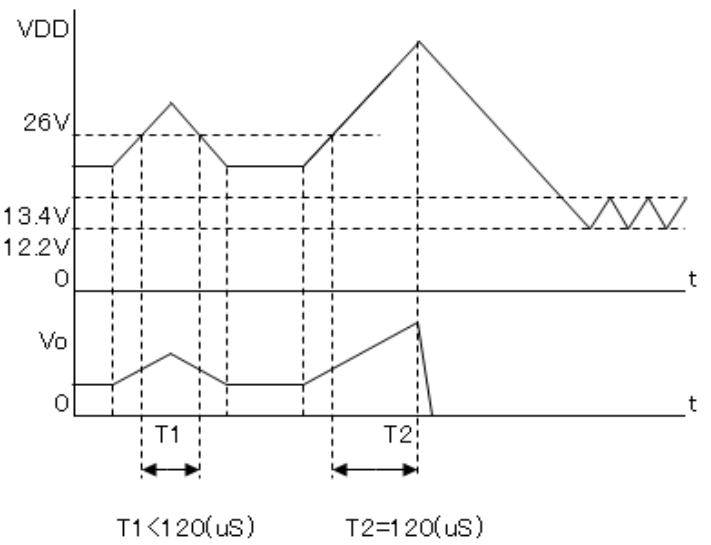

Timing Chart

Over voltage protection（DMG)

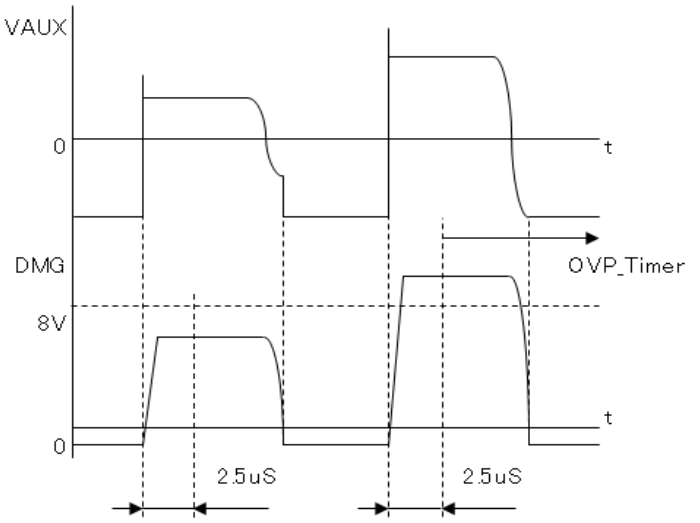

PFC circuit on/off function

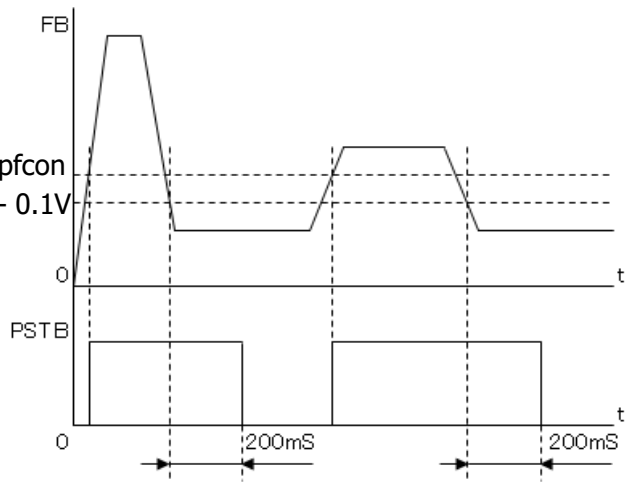

Typical Application Circuit

MM3661A～F

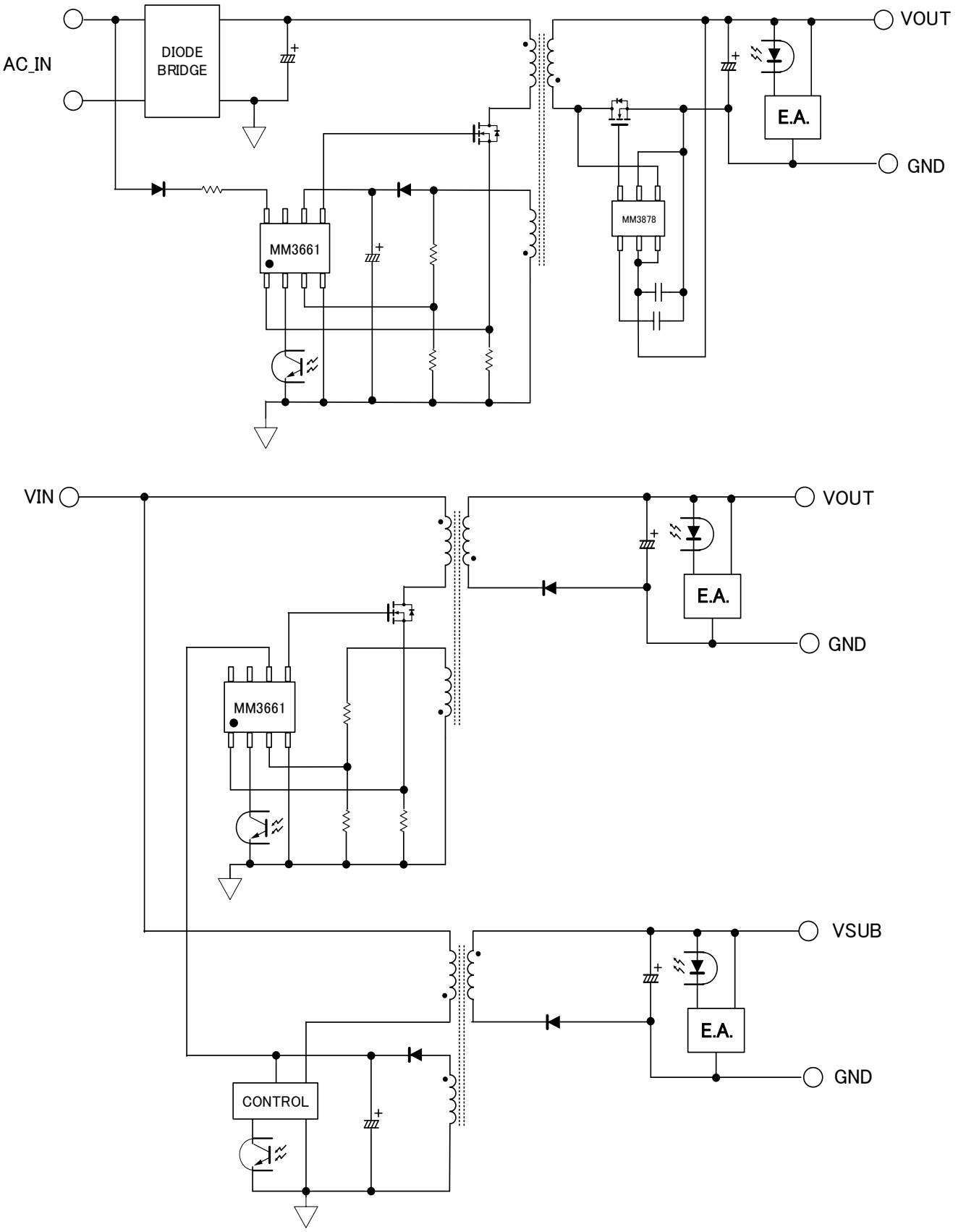

Typical Application Circuit

MM3661XF

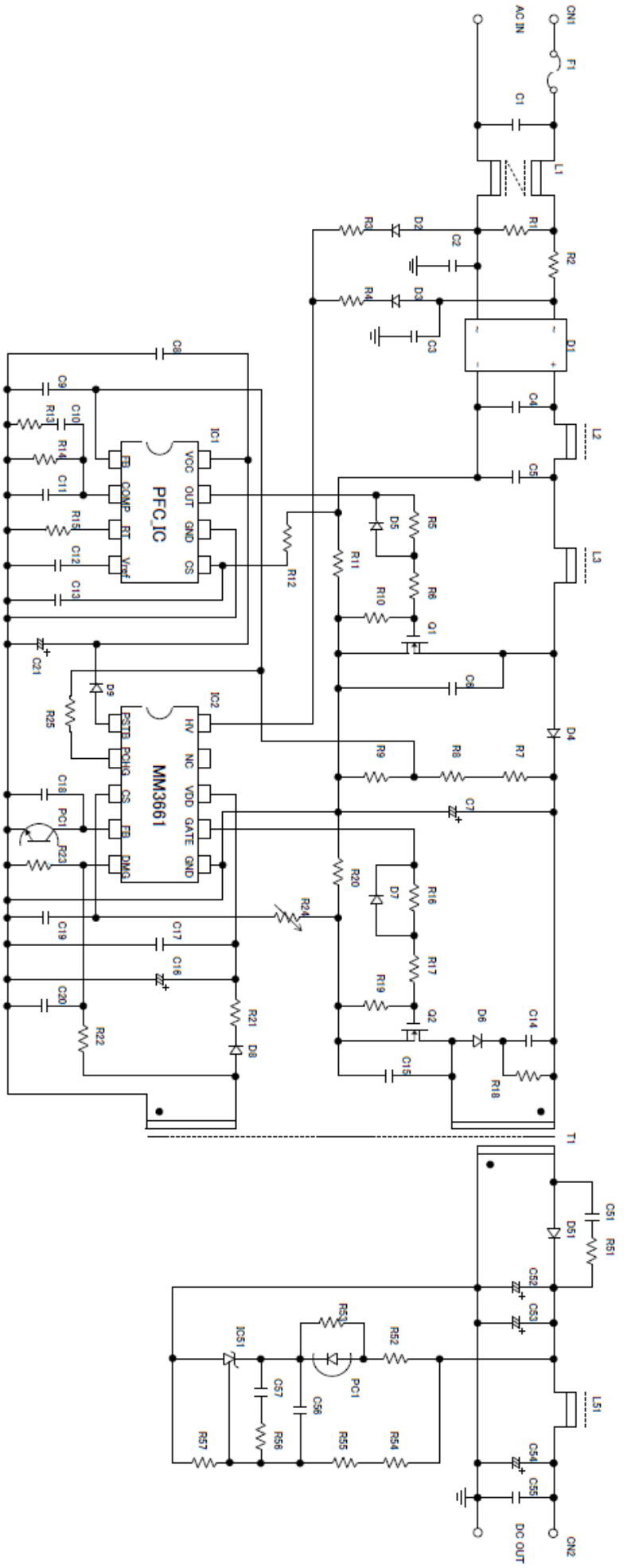

Typical Performance Characteristics

(unless otherwise specified TA=25℃)

HV Input Current(Ihv1) vs. HV Pin Voltage

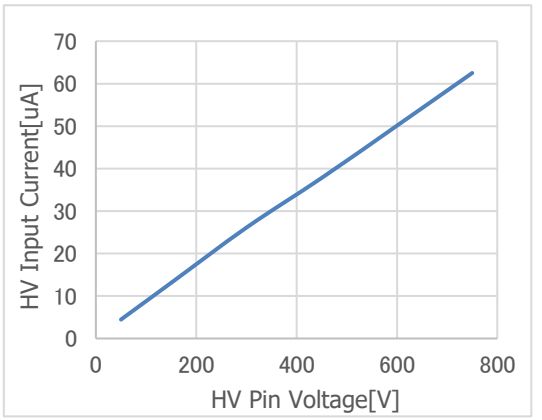

HV Input Current(Ihv2) vs. HV Pin Voltage

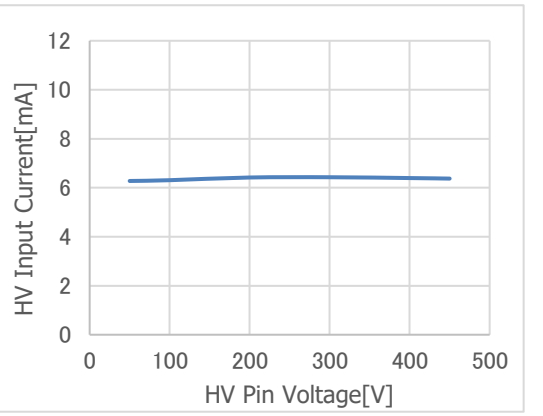

Source Current in Startup vs. VDD Pin Voltage

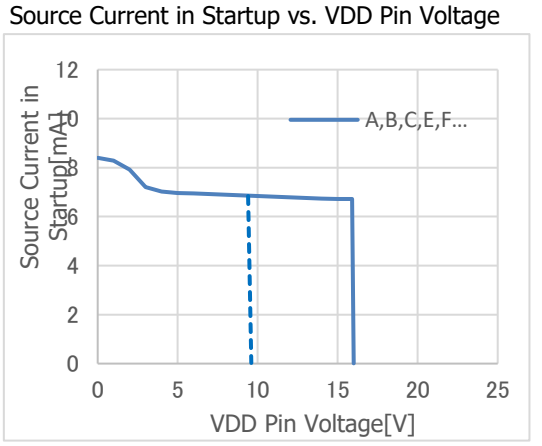

Supply Current1 vs. Supply Voltage

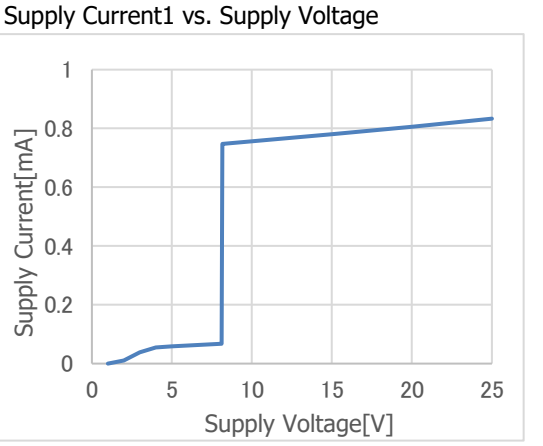

Supply Current in Latch vs. Supply Voltage

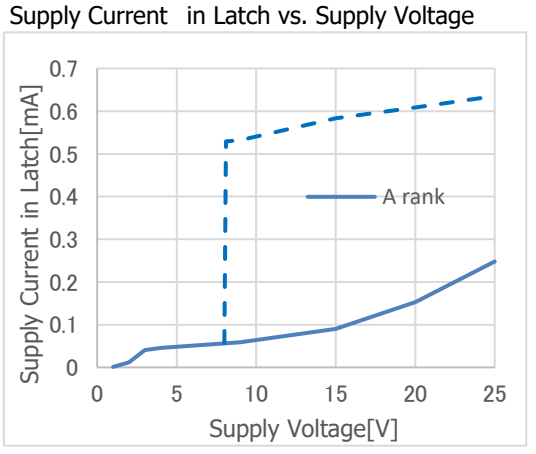

Over Current Detection Voltage vs. FB Pin Voltage

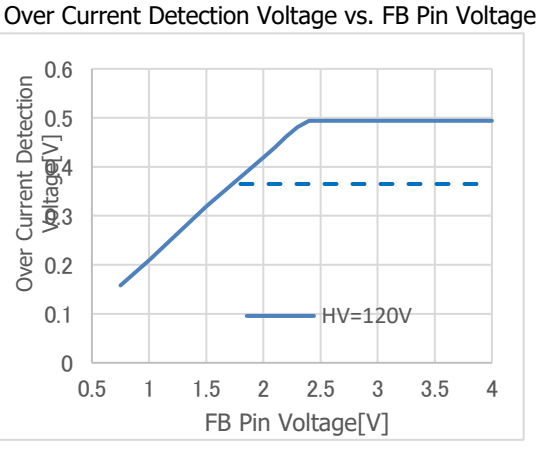

Typical Performance Characteristics

(unless otherwise specified TA=25℃)

Shortest Blanking Time vs. FB Pin Voltage

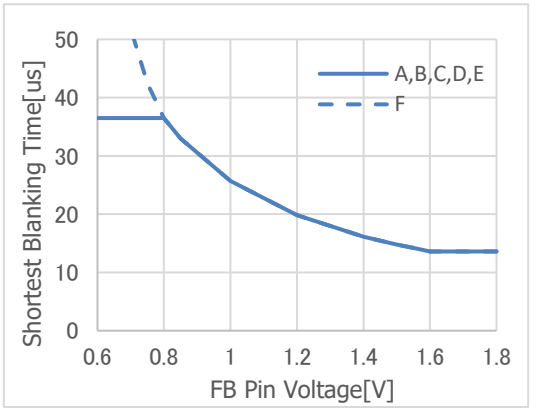

Frequency vs. FB Pin Voltage

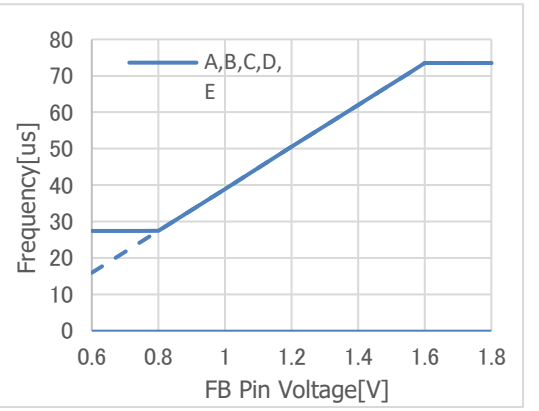

HV Input Current(Ihv1) vs. Temperature

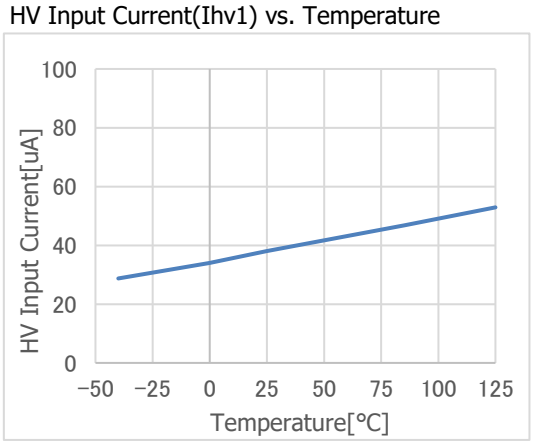

HV Input Current(Ihv2) vs. Temperature

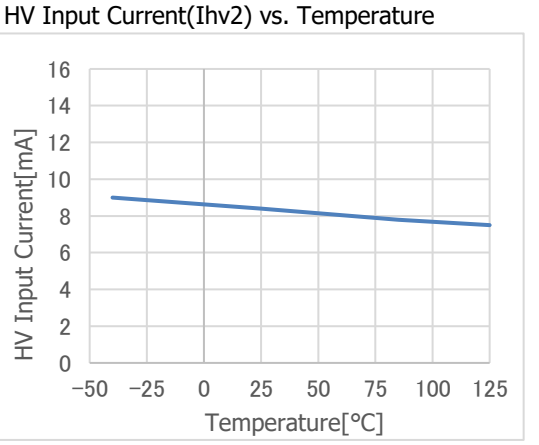

Operating Start Voltage vs. Temperature

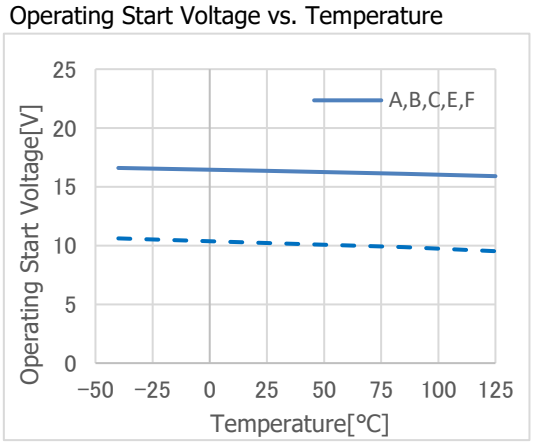

Operating Stop Voltage vs. Temperature

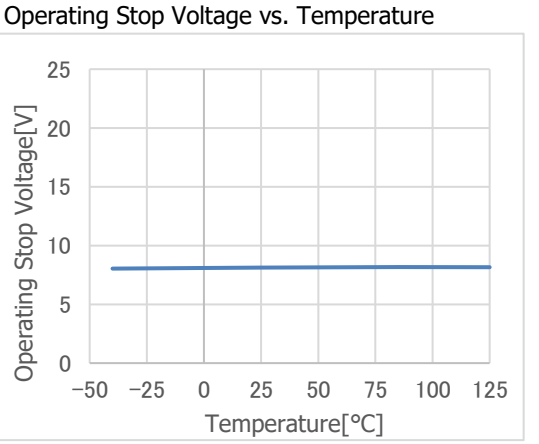

Typical Performance Characteristics

(unless otherwise specified TA=25℃)

Supply Current vs. Temperature

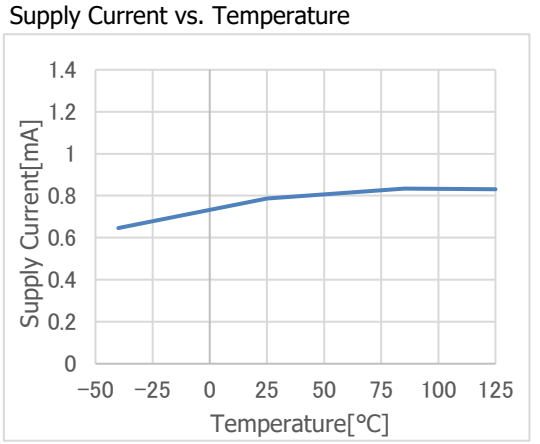

Supply Current in Latch vs. Temperature

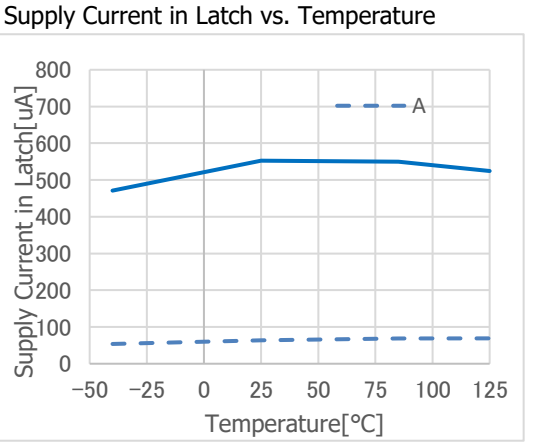

VDD Over Voltage Detection vs. Temperature

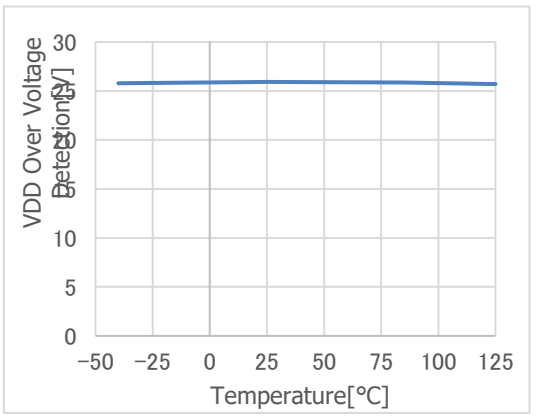

FB Source Current(Ifb1) vs. Temperature

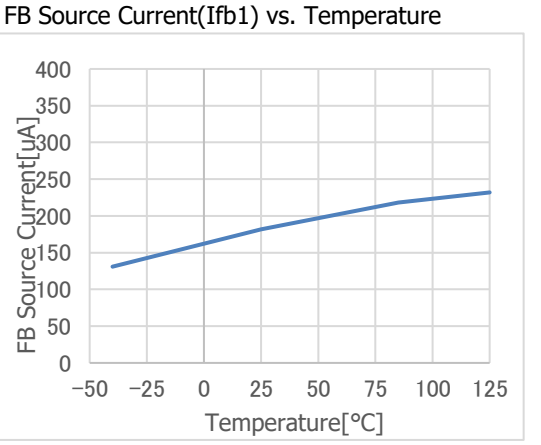

GATE Output Stop Voltage vs. Temperature

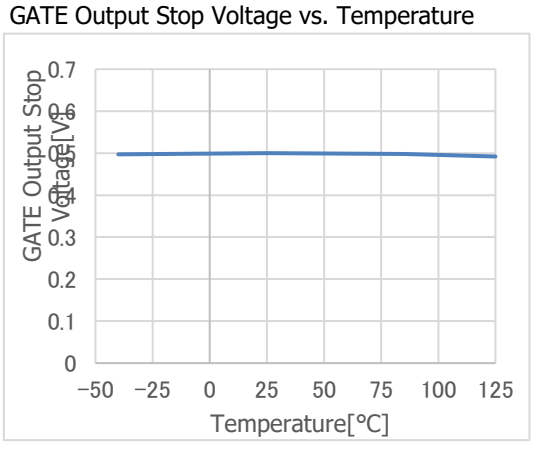

Over Load Detection Voltage vs. Temperature

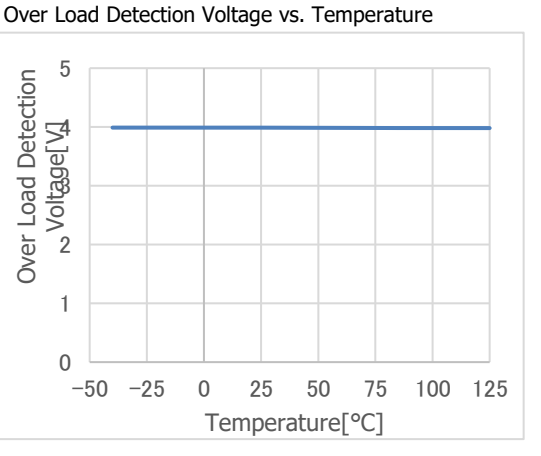

Typical Performance Characteristics

(unless otherwise specified TA=25℃)

Over Load Detection Timer vs. Temperature

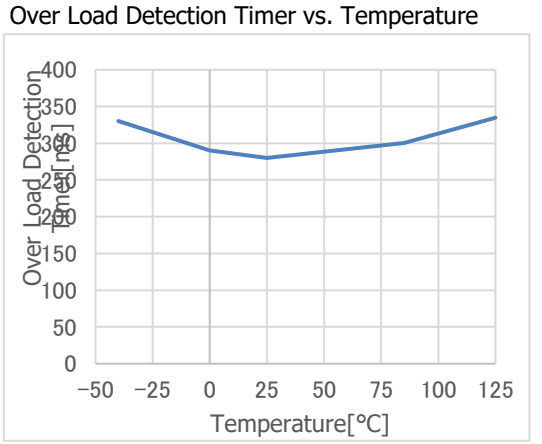

Restart Timer vs. Temperature

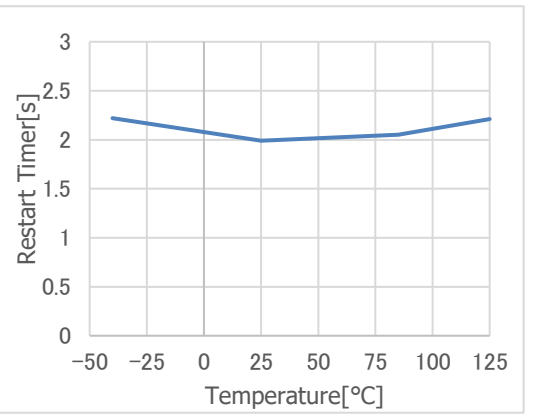

Over Current Detection Voltage vs. Temperature

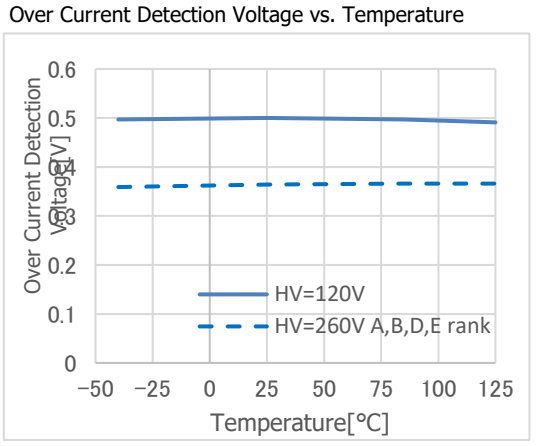

CS Source Current vs. Temperature

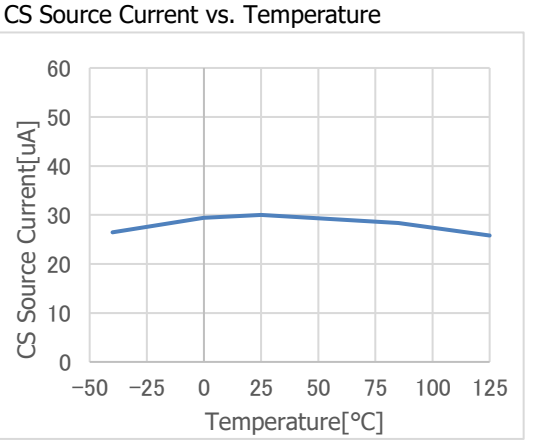

Minimum ON Time vs. Temperature

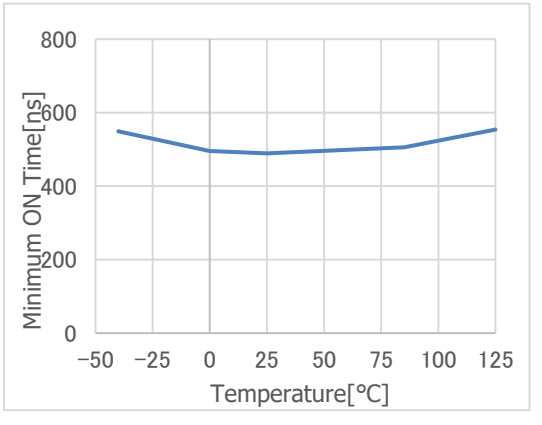

CS Latch Stop Detection Voltage vs. Temperature

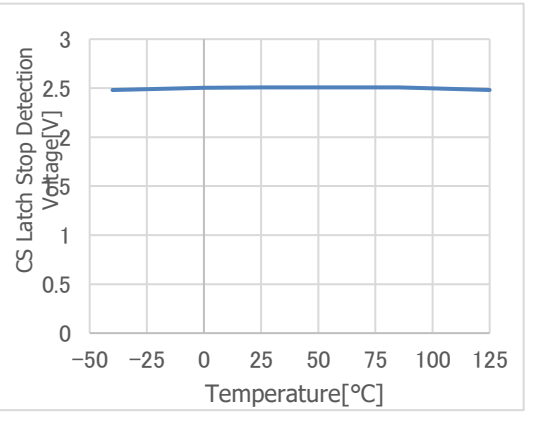

Typical Performance Characteristics

(unless otherwise specified TA=25℃)

Zero Current Detection Voltage vs. Temperature

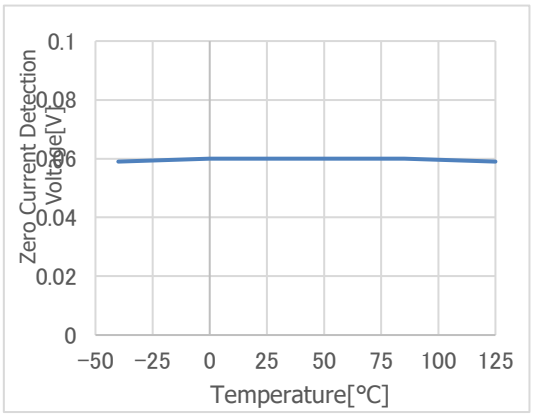

Zero Current Detection Release Voltage

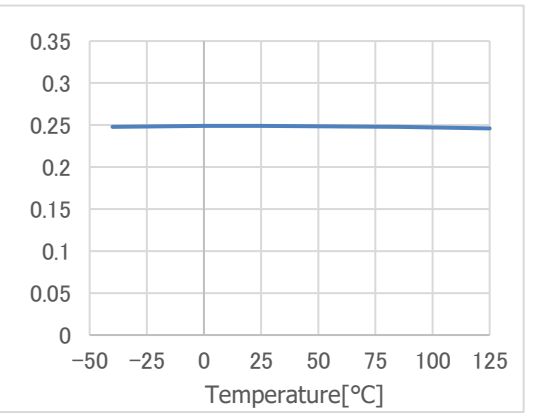

DMG Over Voltage Detection vs. Temperature

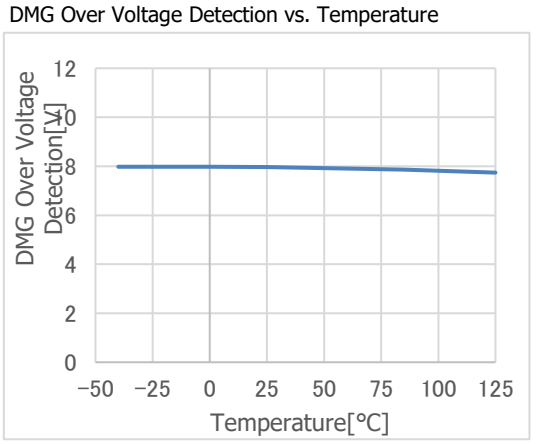

DMG Over Voltage Detection Delay Time vs. Temperature

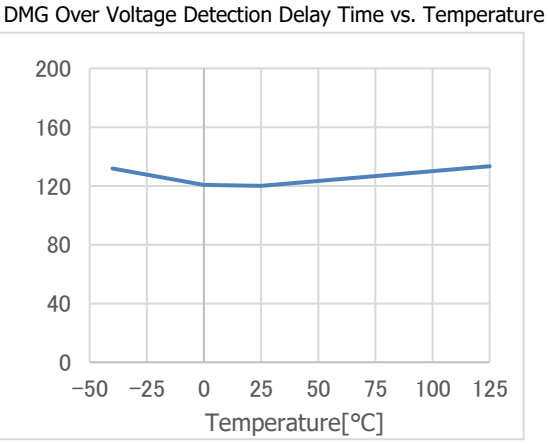

Maximum ON Time vs. Temperature

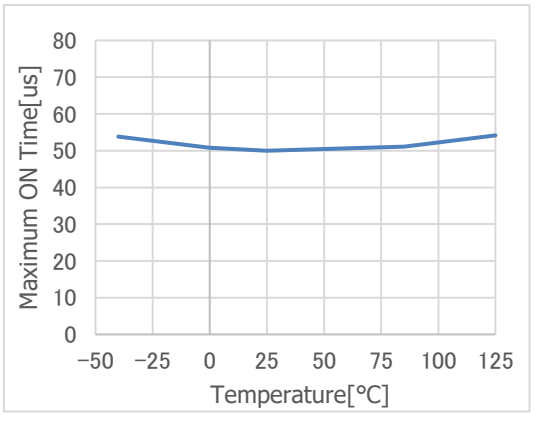

Shortest Blanking Time1 vs. Temperature

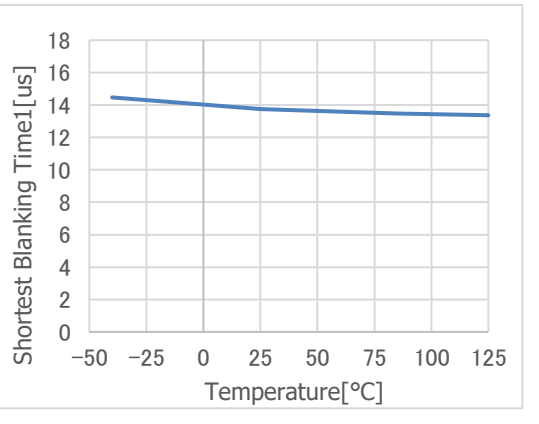

Typical Performance Characteristics

(unless otherwise specified TA=25℃)

Shortest Blanking Time2 vs. Temperature

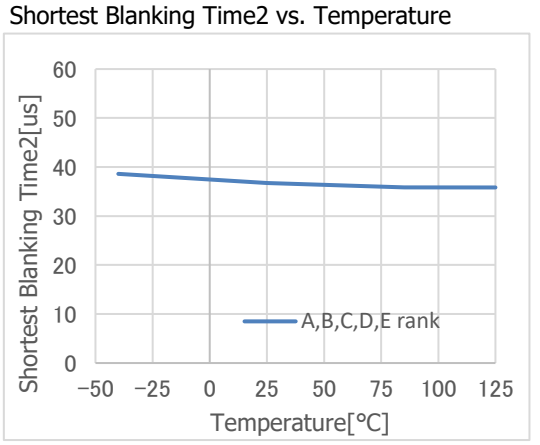

Shortest Blanking Time3 vs. Temperature

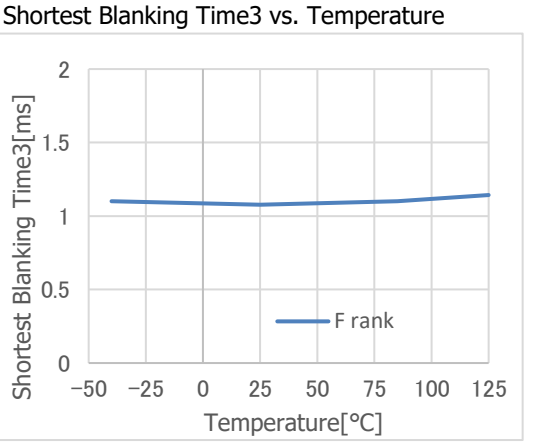

Time Out vs. Temperature

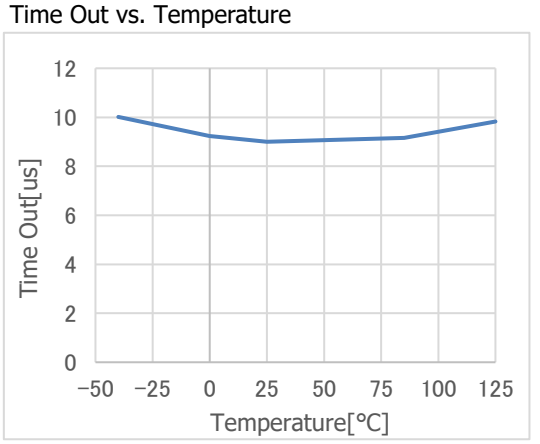

L Output Voltage vs. Temperature

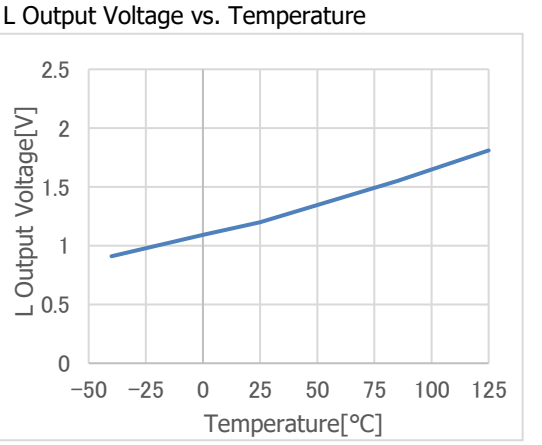

H Output Voltage vs. Temperature

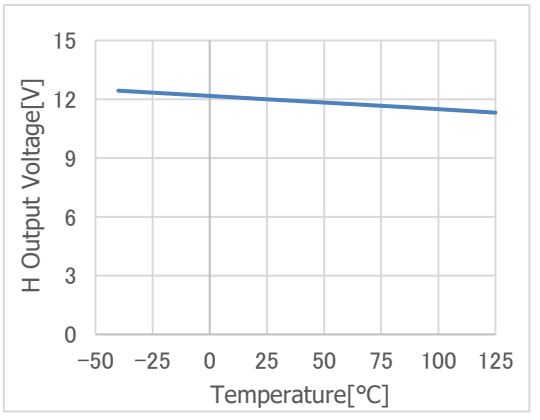

Rise Time vs. Temperature

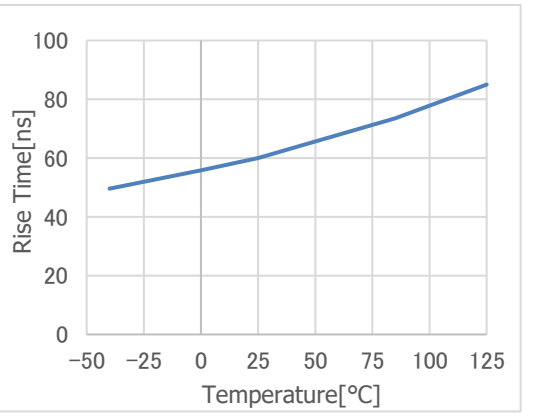

Typical Performance Characteristics

(unless otherwise specified TA=25℃)

Fall Time vs. Temperature

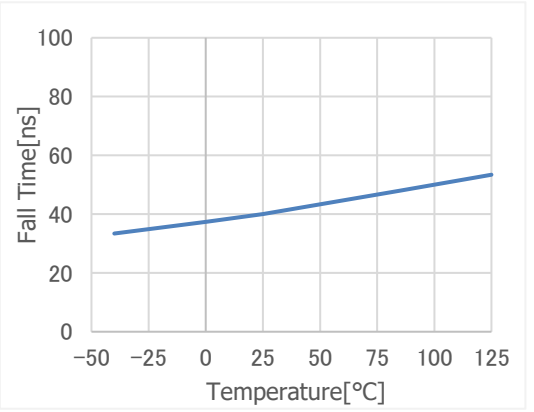

HV Input Current(Ihv3) vs. HV Pin Voltage

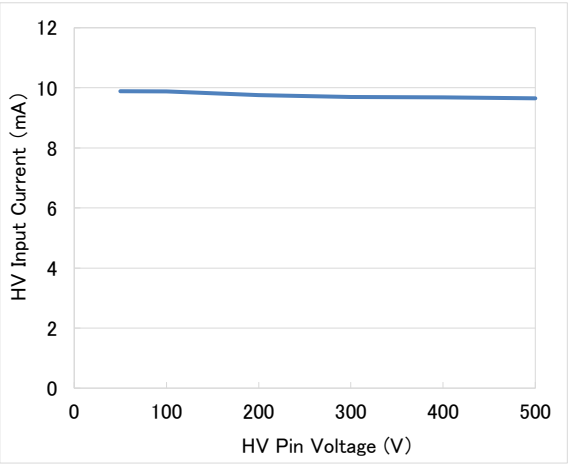

Source Current in Startup(X rank) vs. VDD Pin Voltage

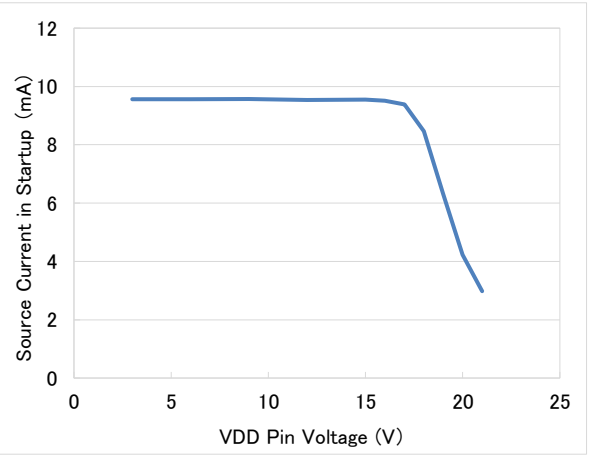

Supply Current2 vs. Supply Voltage

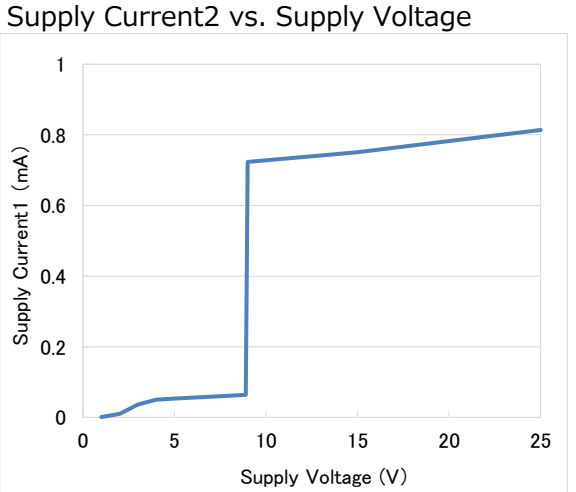

Supply Current3 vs. Supply Voltage

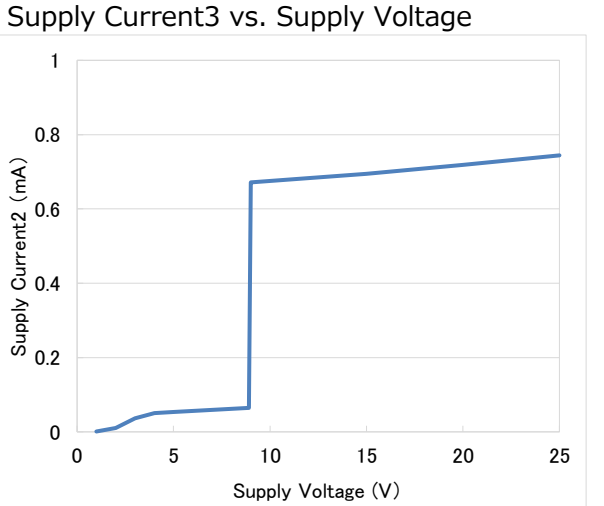

Typical Performance Characteristics

(unless otherwise specified TA=25℃)

Supply Current in Latch

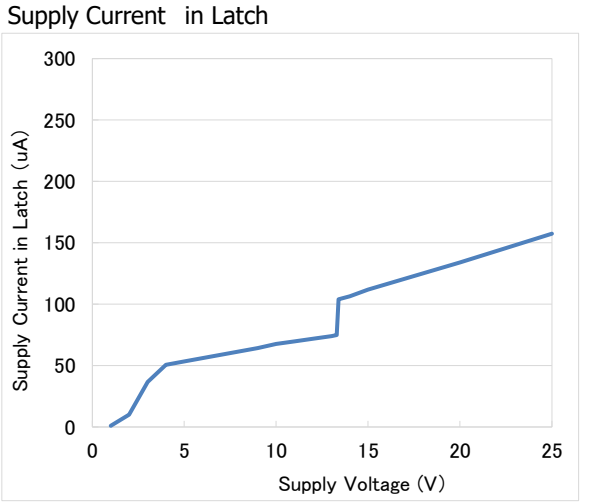

HV Input Current(Ihv3) vs. Temperature

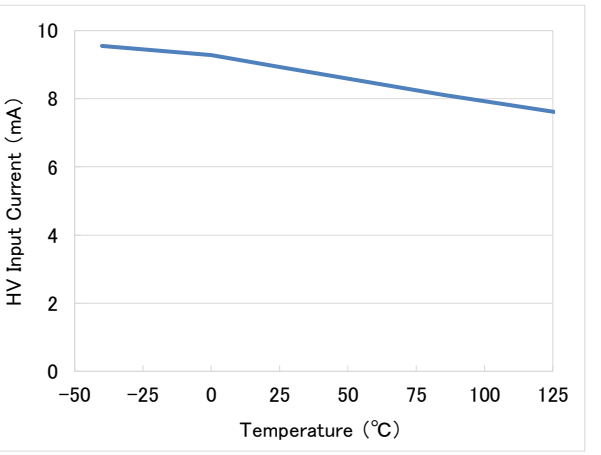

Operating Start Voltage(X rank) vs. Temperature

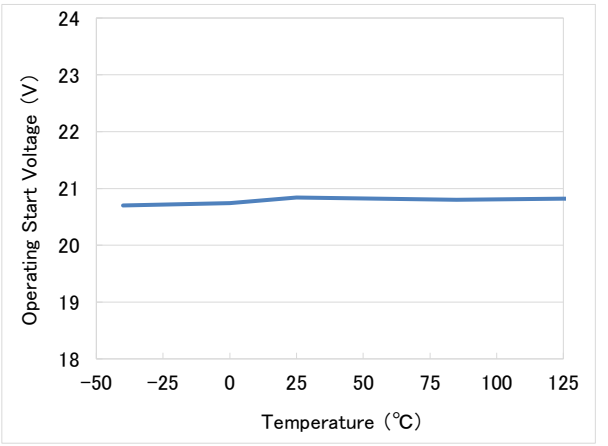

Operating Stop Voltage(X rank) vs. Temperature

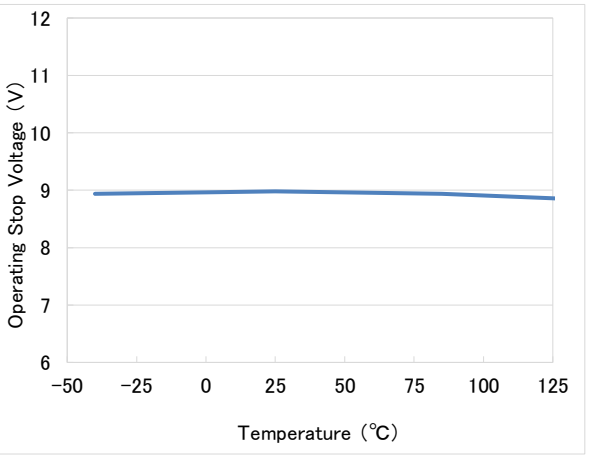

FB Source Current(X rank) vs. Temperature

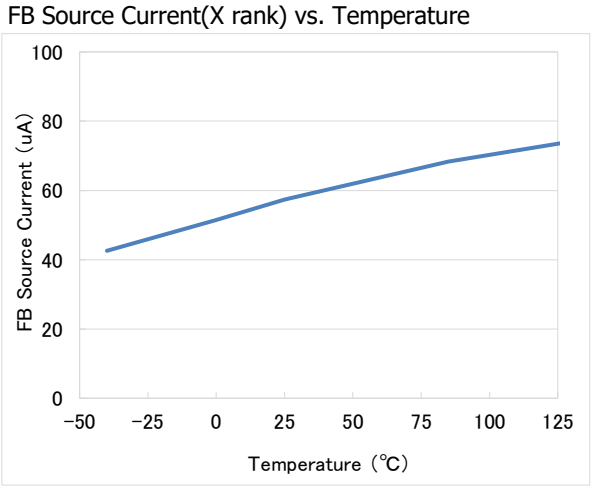

Over Current Detection Voltage3 vs. Temperature

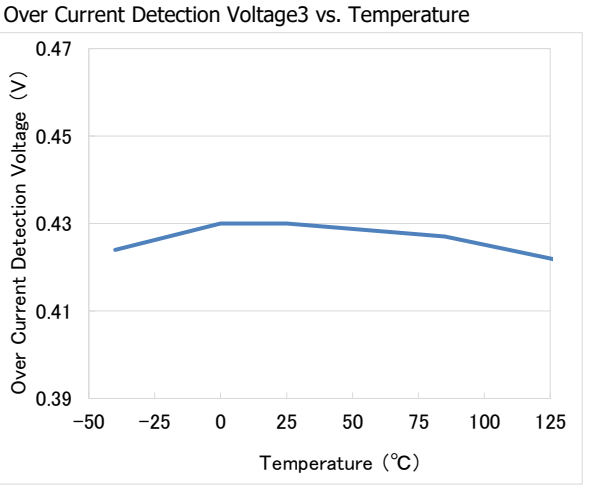

Typical Performance Characteristics

(unless otherwise specified TA=25℃)

PFC Output Conversion Voltage vs. Temperature

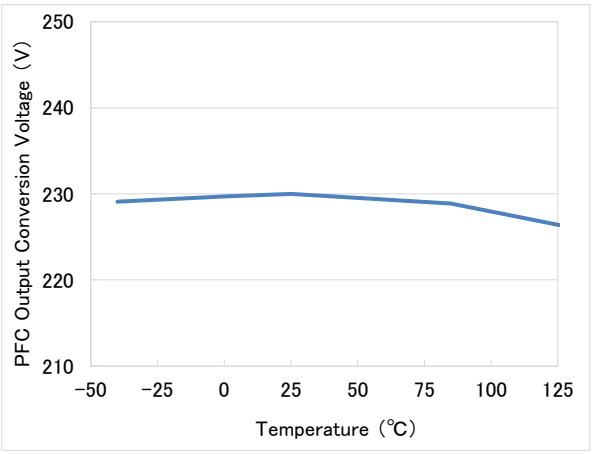

PFC ON Detect Voltage1 vs. Temperature

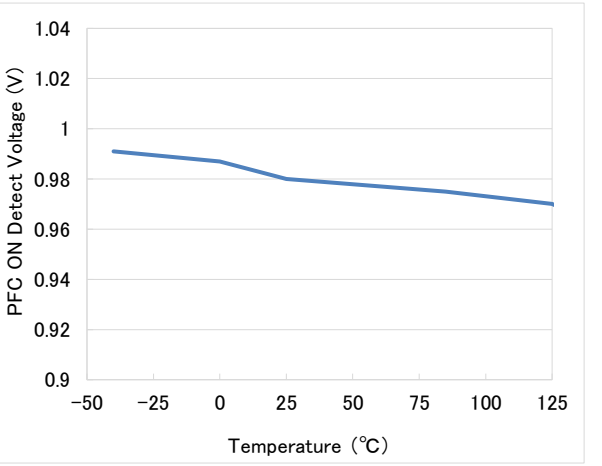

PFC ON Detect Voltage2 vs. Temperature

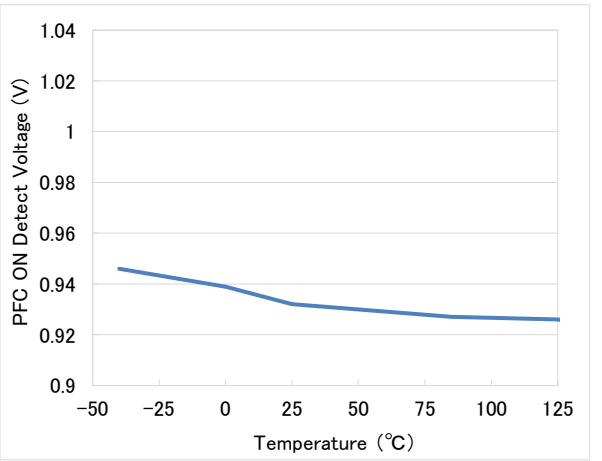

PSTB Output ON Resistance vs. Temperature

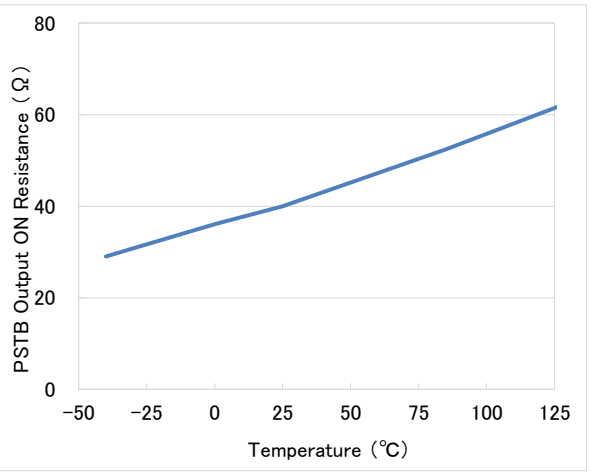

PCHG Output ON Resistance vs. Temperature

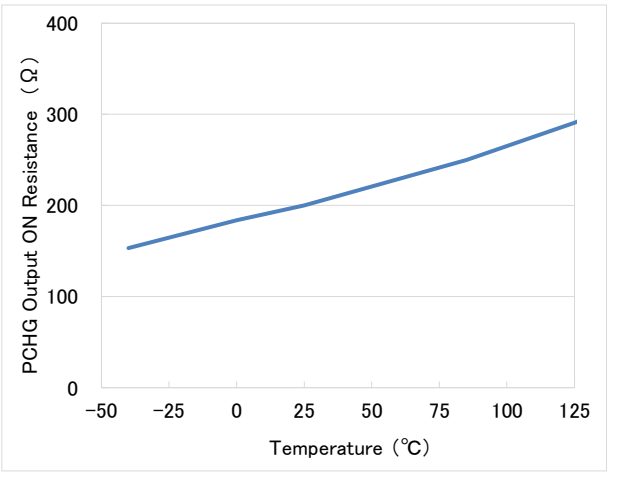

PCHG OFF Leak Current vs. Temperature

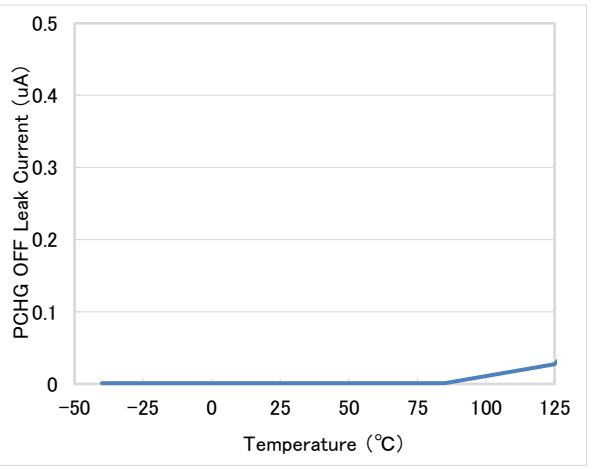

Dimension

Package : SOP- 8 J

UNIT	mm

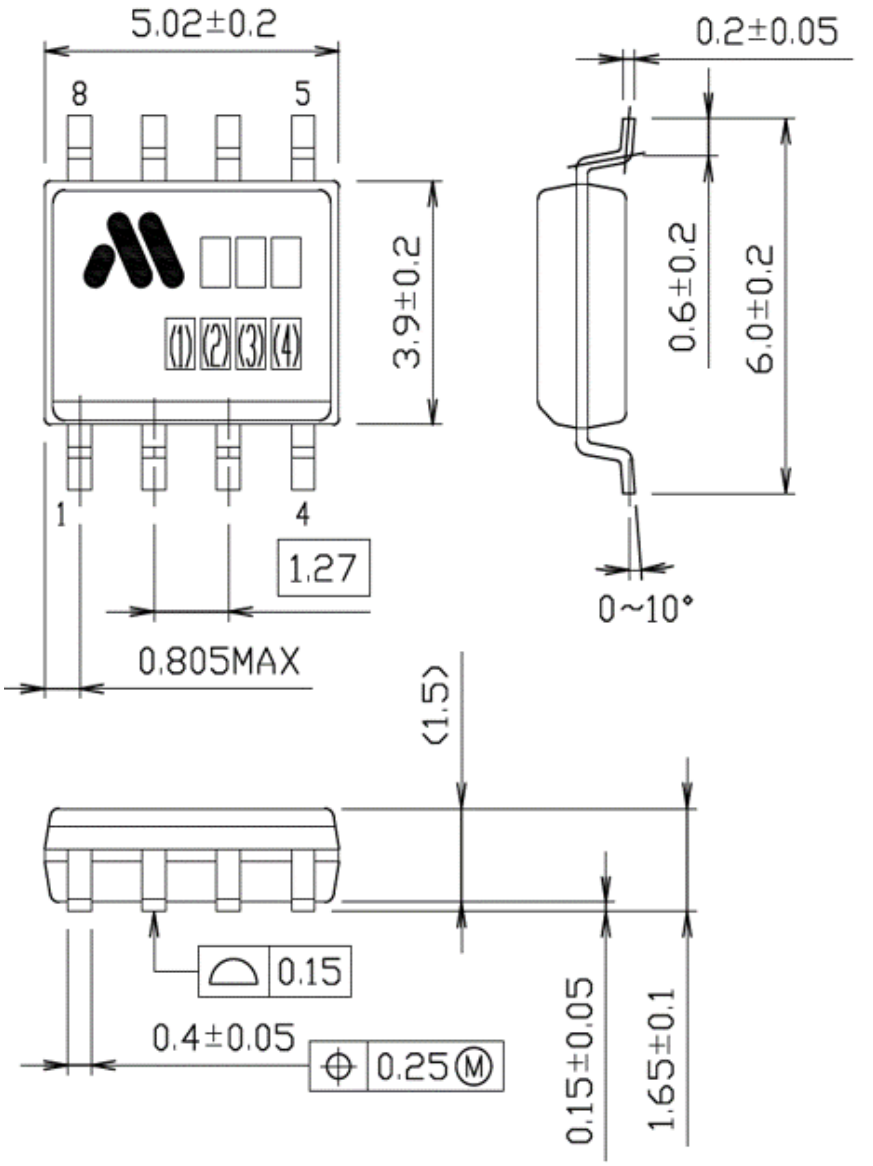

Dimension

Package : SOP-10A

UNIT	mm

