Minebea

Object Type CCP1-※-Z, TCP1-※-Z
UCG1-※-Z

INSTRUCTION MANUAL

(For Pressure-proof &Explosion-proof Type Load Cells)

Read this instruction manual with care before using this product.
Be sure to observe the important points mentioned in this manual . Keep this manual in custody near by in such a way that you may refer thereto anytime , if required .

The symbols used in this manual are as follows and have the following meanings .

Matters which you must not do absolutely or pay full attention to or keep in mind are marked with the following symbols . Read the sentences marked with these symbols without fall .

⚠	NOTE : If this rule is not complied with , a trouble of injury or accident will be , caused , resulting in endangering human body . What is explained here must not be done absolutely .

❗	This shows an important point or limitation when carrying out operation or doing work . Be sure to read without fall in order to avoid doing in a wrong way .

1. Preface

Thank you very much for your purchase of MinebeaMitsumi type load cell .
To begin with , check whether or not the delivered load cell has been damaged in transit or its type is correct as specified . If found defective , be sure to contact the agent from which you purchased this product or sales office . Refer to the catalogue or specification for the details of specification of the respective types .

2. Outline

The pressure-proof & explosion-proof type load cell is a pressure-proof & explosion-proof construction type load cell meeting the requirements of the GUIDELINE FOR PLANT ELECTRIC FACILITY EXPLOSIONPROOFNESS(Gas, steam, explosion-proofness 1979) edited by Industrial Safety Research Institute of Labour Ministry of the Japanese Government. It is a load cell which can be used in the hazardous area of explosive gas atmospheres specified in the guideline.

NOTE ⚠

- In case of static loads , use the load cell within the range of rated capacities. In case of dynamic loads , use it less than 70% of the rated capacity.
- Do not apply a voltage exceeding the max .applying voltage to the input terminal .
- Fit this load cell with hexagonal (holed) bolts . The bolt sizes to be used are mentioned in the catalogue and specification . Select bolts higher than strength class10.9 of JIS B 1051.
- Under such circumstances that screws tend to loosen , be sure to retighten them periodically or provide detent if required .
- When fitting it to medical machines or apparatuses involving human life , be sure to provide a protective circuit in preparation for functional failure of load cell.
- If used under special operating circumstances , be sure to consult with us once before starting use .
- Please handle with great caution, since this is a heavy subject.

3. Pressure-proof & explosion-proof

3－1 Pressure-proof & explosion-proof construction

Pressure-proof & explosion-proof construction means a construction designed in such a way that there is no possibility of igniting the outside explosive gas, with the vessel with standing the pressure in case explosive gas has exploded inside a totally enclosed vessel.

3－2 Symbols of explosion-proof construction etc.

Kind of explosion-proof construction	Symbol
・Pressure-proof & explosion-proof construction	d
・flame-proof grade explosion class	2
・Ignition class	G4

3－3 Standard environmental condition of explosion-proof electric facilities

・Above seal level	Less than 1000m
・Ambient temperature	-10℃ to 40℃
・Relative humidity	45% to 85%

3－4 Hazardous areas where used

＊ CLASS 1 AREA
Area where there is a possibility of generating a hazardous atmosphere at normal condition.

＊ CLASS 2 AREA
Area where there is a possibility of generating a hazardous atmosphere at abnormal condition.

3－5 Limit of rising of temperature at operating environment

70℃(but, on the assumption that the ambient temp.40℃)

3－6 Connection of cables

・Special cable (manufactured by our company)	CAB－501(External dia.10, 6-core shield cable)
・Connection method	To be fixed with the specified pressure terminal screws on the terminal board in the load cell terminal box.
・Cable lead-in type	Pressure proof packing type

3－7 Connection method of cables to the terminal box

1) Loosen 6-M4 hex holed bolts of the cover of the terminal box.
2) Putting the gland nut, lock nut, gland washer and packing in the specified cable as illustrated in Fig.1,put it in the cable lead hole.
3) If the lead wire of cable becomes long enough to be the cabling in the terminal board, tighten the gland nut.
4) Tightening the gland nut, when the cable has been fixed completely, tighten the lock nut.
5) Then, tighten, using cable gland 2-M3 hex holed bolt.
6) Provide wiring according to English letters on the terminal board according to(3-9.Electric Wiring Diagram).(Specified pressure terminals are used)
7) After wiring, be sure to tighten the screws on the terminal board.
8) Check and confirm that there is no mistake made in wiring.
9) Fitting an o-ring to the cover of terminal box, be sure to tighten 6-M4 hex holed bolt completely.

3－8 Cautions for explosion-proof construction

1) The upper surface of load cell is a thin diaphragm. If this part is damaged, performance of load cell will become defective or trouble, be caused, resulting in requiring full attention to be paid there.
2) AS for fitting and removal of lock, be sure to use a tool best suited for the screws.
3) Be sure not to lose or miss the screws, washers etc. which have been taken off.

4) When the cover of terminal box is fitted, put an o-ring therein and tighten it.
5) As for cabling, be sure to use an electric conduit for protecting the cable against damage.

3－9 Electric connection diagram

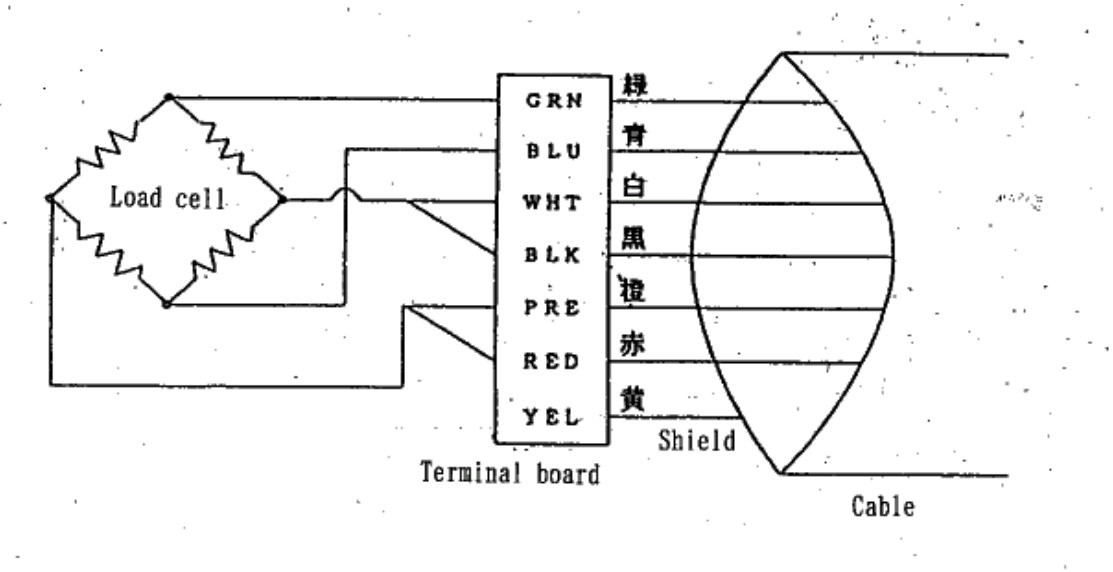

	INPUT		OUTPUT		SHIELD
	(＋)	(－)	(＋)	(－)	
COLOR CLASS-IFICATION	RED ORANGE	WHITE BLACK	GREEN	BLUE	YELLOW

●FIG.1

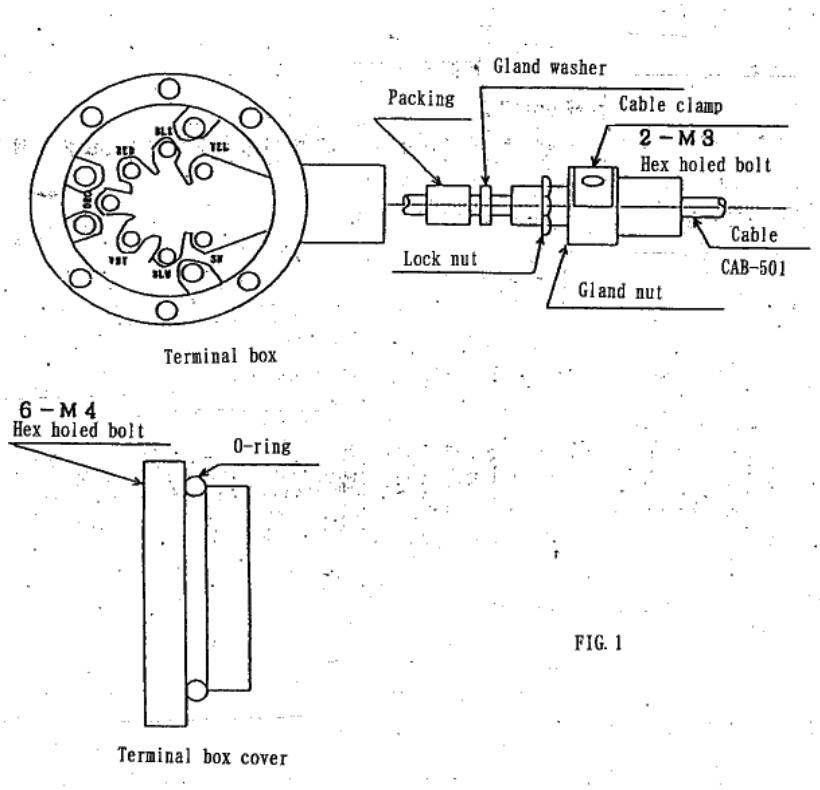

FIG. 1

4. Fitting method

① Using hexagonal bolts (holed) , fit the load cell as illustrated hereunder .
Use spring washers for prevention of loosening .

② Select fitting bolts higher than strength class 10.9 of JIS B 1051 .
If stainless steel bolts are used , use bolts of strength class 80 of JIS B1054 .

③ As for the fitting length of screws , it shall be longer than the nominal diameter of screw .The pedestal must have full rigidity and flat, higher than 25s in surface finish .

④ Fit it in such a way that no dust or foreign matter is not held between .

⑤ The bolt sizes to be used shall be those mentioned in the catalogue and specification .

⑥ The proper tightening torques shall be adopted , referring to the following table .

NOMINAL DIA .OF BOLT	PROPER TIGHTENING TORQUE(N-m)	
	(N・m)	(kgf・cm)
6	13.7	140
8	33.3	340
10	65.7	670
12	115	1170
16	279	2850
18	382	3900
20	539	5500
22	686	7000
24	784	8000

● Compression

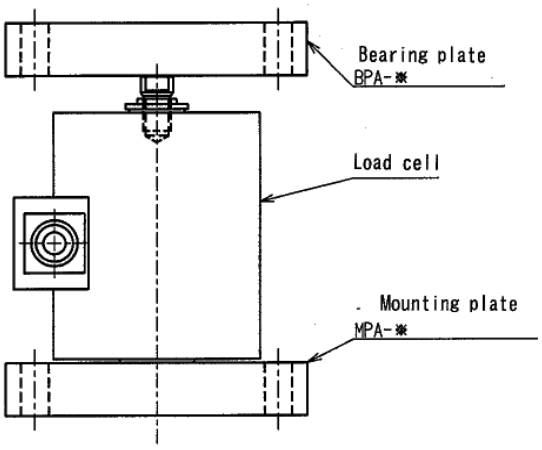

● Tension

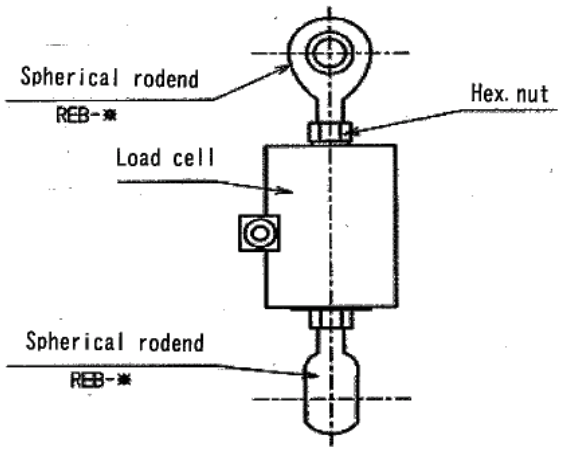

● Expansion escape hardware

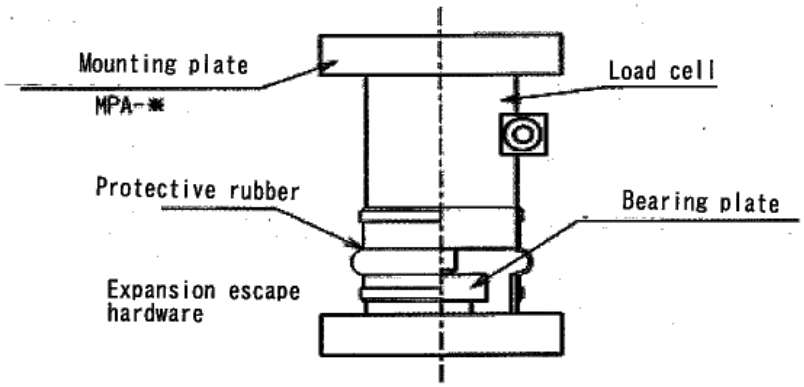

Accessories
Mounting plate , bearing plate , expansion escape hardware and spherical rod ends etc , are available at separate prices .

5. Important points for use

① In case of static loads , use it within the range of rated capacities .
In case of dynamic loads , use it less than 70% of rated capacities .

② If there should be an impact load or vibration , a dynamic load calculated by multiplying static load by acceleration will act on the load cell .
Therefore , take a measure to prevent the value calculated by taking into consideration acceleration from exceeding the rated capacity of load cell .

③ If there is a possibility that an overload will act on load cell , provide a safety device against damage .

④ The installing place must have full strength .

⑤ Use it in an ambient temperature within the range temperature compensation range .

⑥ Be sure to avoid a rapid change in temperature and direct heat .

⑦ Checking protecting class , use it in such an environmental condition free from formation of dew .

⑧ Under such circumstances where electric and magnetic fields are very strong , noise is generated sometimes .Therefore , avoid using it at such circumstances .

⑨ Do not bend the cable lead hole extremely or pull strongly . When carrying it from place to place , do not hold the cable to suspend the load cell .

⑩ Under vibrating circumstances , fix the cord in the vicinity of cable lead hole and provide a means for prevention of vibration thereto .

⑪ Under such circumstances where screws tend to be loosened , retighten periodically and provide a detent means thereto , if required .

⑫ When fitting it to medical treatment machines and other apparatuses involving human life , be sure to provide a protective circuit thereto , in preparation for functional failure of load cell .

⑬ Do not disassemble the load cell .

⑭ Do not drop any thing on the load cell or give a shock thereto .

⑮ When discarded , dispose of it , taking into full consideration the environmental condition .

⑯ Please handle with great caution, since this is a heavy subject.

6. Trouble shooting

If an overload exceeding the allowable value is applied or if an overload other than center load is applied , be sure to make calibration again in order to check whether it can be used normally .If indication is unstable or abnormal , check whether or not connection with gauge is made correctly and reliably or the important matters in use in item 5 are used properly .

① Check whether or not the input/output resistance is within the range of specified values with a tester etc .

② Check whether or not the insulation resistance of load cell body and core wires of cord is within the specified range of values .

③ Check whether or not the output (zero balance) without load is within the range of specified values.

If the values of the abovementioned measurement are abnormal , be sure to contact our company at once .

If there should be an unknown point in connection method etc ., contact our company .

Understand the text of the this manual is subject to change without notice .